CITY OF WEST ST. PAUL
1616 HUMBOLDT AVENUE, WEST ST. PAUL, MN 55118

REGULAR CITY COUNCIL MEETING
May 23, 2016
6:30 p.m.
MUNICIPAL CENTER COUNCIL CHAMBERS

1. **CALL TO ORDER**

2. **ROLL CALL**

3. **PLEDGE OF ALLEGIANCE**

4. **ADOPT THE AGENDA**

5. **OCWS BRIEFING**

6. **ROBERT STREET REVIEW**

7. **CITIZEN COMMENTS**
   Individuals may address the City Council about any item not included on the regular agenda. Speakers are requested to come to the podium, state their name and address for the Clerk's record. Generally, the City Council will not take official action on items discussed at this time, but may typically refer the matter to staff for a future report or direct that the matter be scheduled on an upcoming agenda.

8. **COUNCIL COMMENTS**

9. **PROCLAMATIONS, PRESENTATIONS AND RECOGNITIONS**

10. **CONSENT AGENDA**
    All items on the Consent Agenda are considered to be routine and have been made available to the City Council at least two days prior to the meeting; these items will be enacted by one motion. There will be no separate discussion of these items unless a Council member or citizen so requests, in which event the item will be removed from this agenda and considered under separate motion.

    A. City Council Meeting Minutes

    Documents: 4-25-16 OCWS MINS.PDF, 5-09-16 OCWS MINS.PDF, 5-09-16 CC MINS.PDF

    B. List Of Claims May 23, 2016

    Documents: COUNCIL REPORT - LIST OF CLAIMS MAY 23, 2016.PDF

    C. 2015 Year End Transfers

    Documents: COUNCIL REPORT - APPROVAL OF TRANSFERS.PDF

    D. April 2016 Investment Report

    Documents: COUNCIL REPORT - APRIL 2016 INVESTMENT REPORT.PDF, APRIL 2016 INVESTMENT REPORT.PDF

    E. April 2016 General Fund Budget Report

E. April 2016 General Fund Budget Report

Documents: COUNCIL REPORT - APRIL 2016 GENERAL FUND BUDGET REPORT.PDF, APRIL 2016 GENERAL FUND BUDGET REPORT.PDF

F. City Licensing

Documents: COUNCIL REPORT - CITY LICENSING.PDF

G. Rental Licensing

Documents: COUNCIL REPORT - RENTAL LICENSING.PDF

H. Interfund Loan

Documents: COUNCIL REPORT - APPROVAL OF INTERFUND LOAN.PDF

I. Application For An Interim Use Permit To Allow For Outdoor Display/Sale Of Fireworks At 1640 Robert St. (Walmart) – TNT Fireworks

Documents: COUNCIL REPORT.PDF, RESOLUTION.PDF, PC REPORT.PDF, APPLICATION PACKAGE.PDF

11. PUBLIC HEARING

A. Applications For A Site Plan, Plat, And Conditional Use Permits For The Redevelopment Of 1685, 1701 And 1725 Robert St. – Venture Pass Partners, LLC

Documents: COUNCIL REPORT - TC2.PDF, RESOLUTIONS - TC2.PDF, PC REPORT.PDF, ATTACHMENTS.PDF, CIVIL PLANS.PDF, ELEVATIONS.PDF, PLAT DOCUMENTS.PDF

B. Application For A Conditional Use Permit To Allow For The Expansion Of An Essential Service Structure (Building Expansion) At 1365 Bidwell St. – St. Paul Regional Water Services

Documents: COUNCIL REPORT.PDF, PC REPORT.PDF, PLANS.PDF

C. Final Reading - City Ordinance Amendment, Section 92.02 Regarding Garbage And Rubbish And Temporary Outdoor Storage Containers – City Of West St. Paul

Documents: COUNCIL REPORT - FINAL READING TRASH.PDF, ORDINANCE - FINAL TRASH AMEND.PDF

D. Final Reading And Public Hearing On Proposed Amendments To City Code Chapter 50 Section 50.08 Regarding Discharge Of Prohibited Clear Water Drainage; Sump Pumps

Documents: COUNCIL REPORT-I AND I RECOMMENDATIONS SECOND READING.PDF, AGREMENT-2016 I AND I MEMORANDUM OF UNDERSTANDING WITH MET COUNCIL.PDF, ORDINANCE AMENDING I-I REGARDING INSPECTIONS - SECOND READING.PDF

12. NEW BUSINESS

A. Approve Sale Of 2016 GO Revenue Bonds

Documents: COUNCIL REPORT - APPROVE SALE OF 5,110,000 GO UTILITY REVENUE BONDS, SERIES 2016A.PDF, BOND RESOLUTION 2016A.PDF

B. Approve Joint Powers Agreement With Dakota County For Safe Routes To School Project #14-6

Documents: COUNCIL REPORT - APPROVE JPA WITH COUNTY FOR PROJECT 14-6.PDF

C. First Reading - Zoning Ordinance Amendment, Section 153.029 Regarding Interim Use Permits – City Of West St. Paul

Documents: COUNCIL REPORT - FIRST READING.PDF, ORDINANCE.PDF

D. First Reading - Permit Parking Ordinance

Documents: MEMO TO CC RE PERMIT PARKING ZONES - 1ST READING 5-23-16.PDF, PERMIT PARKING ORDINANCE AMENDMENT - REV.PDF

13. **OLD BUSINESS**

14. **ADJOURN**

If you need an accommodation to participate in the meeting, please contact the ADA Coordinator at 651-552-4100, TDD 651-322-2323 at least 5 business days prior to the meeting

www.wspmn.gov EOE/AA

City of West St. Paul
Open Council Work Session
April 25, 2016

1. Roll Call

Mayor David Meisinger called the work session to order at 5:00 p.m.

Present: Mayor David Meisinger and Councilmembers Armon, Halverson, Bellows, Iago, Napier and Vitelli.

Others: City Manager Matt Fulton, Assistant City Manager and HR Director Sherrie Le, Community Development Director Jim Hartshorn, Police Chief Manila Shaver, Fire Chief Mike Pott, Public Works and Park Director Ross Beckwith, Attorney Korine Land, Assistant Community Development Director Ben Boike and City Clerk Chantal Doriott.

2. Approve Agenda

Council approved the work session agenda as presented.

3. Review the Regular Meeting Agenda

Council approved the regular meeting consent agenda items and added:

- Rental license review;
- Discuss Marie Ave. - traffic needs - pedestrian cross walks and/or arrow; and
- Remove Net Ministries since Director Boike spoke with the Net Ministries Director and they have a meeting May 9. This may be considered on the May 23 OCWS or regular meeting.

4. Agenda Item

4.A. Trash Storage and Temporary Storage Container Amendment

During the recent codification process, Staff proposed the inclusion of a text amendment to provide requirements for temporary outdoor storage containers, also known as PODs, on residential property. Instead of rushing the proposed amendment through the codification process, Council requested that the draft amendment be reviewed through the normal code amendment process. In addition to adding language relating to storage containers, Staff is also proposing some text amendments in relation to residential trash containers. The proposed ordinance accomplishes the following:

1. Clarifies that trash containers can be set out no sooner than the day before collection day and must be removed no later than the day after collection day. When not awaiting collection, trash containers must be stored in the rear yard, garage or in an accessory building. However, they can be stored in a side yard if the house is setback at least 50 feet from the curb or if screened by a hedge or other enclosure.

2. Limits the location, length of time, and number of temporary outdoor storage containers allowed on a lot at one time on residential property and establishes a permitting process. Temporary outdoor storage containers shall be limited to no more than one portable on-demand storage unit, and one roll-off dumpster, for no more than 30 days on a site in a 12 month period with extensions allowed if used in conjunction with a valid building permit.

Comments:

- In favor of changes.
- Little unclear about stuff that doesn't fit in the trash containers – bags of leaves and bundled twigs, etc. hopefully a person has a container that can house all of their debris.
- Screening of trash containers – there is no consistency about trash being picked up, etc.
- Clpn. Vitelli suggested taking a poll at the open house for single source hauler.
- We run into issues of people leaving trash out for a week. That is the reason for the code amendments.
- Code enforcement will be done by mail. A citation or abatement could be part of the process.
- It doesn't address where trash cans are in this draft. It says "1. In the front drive …" People might not understand that; it needs to be clearer. We could say behind the curb – Council agrees.
- Limit one portable storage unit per residence. Someone might order 4 smaller ones if they are moving. This could be problematic. Do they need to be permitted? Yes, so we could address it during the permit process. Mayor Meisinger would like to limit the container to length and not a number – define this section better.
- Roll-offs – there is a permit process in place for dumpsters in the street and this would include any dumpster in the right-of-way.
- One pod and one roll-off is outlined in the written draft.

Changes will be made and this will be reviewed at a future meeting.

Clpn. Halverson discussed an incident with a family on the corner of Livingston and Bernard with so many issues with nuisance. The family is ready to move due to parking issues in this area on Livingston. Manager Fulton said staff is prepared to bring forth consideration for parking and issuance of permits and this comes at an expense. Council worries about others wanting this same treatment. This has been done on Imperial and there haven't been any issues. This is a situation dealing with parking. Manager Fulton said typically it's weekend cars and weekend guests. Director Hartshorn could get a map with highlighted areas of concern, for Council to review. Clpn. Halverson said the property owner would be willing to speak on the issue.

We have an abundance of signs throughout the city. We have one code enforcement agent. We recently picked up 20+ signs that were not compliant. If we are doing this work we should make it uniform and have staff – code enforcement personnel, public works, park workers, etc. remove any sign that is not compliant. Director Boike mentioned we are hiring a summer code enforcement person who will be assisting this process of keeping West St. Paul compliant. What about the source – especially after a few times of the same issues continuing? Director Boike said yes, we call the person/company who is non-compliant with signage if we have the phone number.

Clpn. Bellows would like the intersection of Marie and Livingston revised as car and pedestrian traffic are at odds. There is currently no crosswalks or barrier or protection for pedestrians. We should consider adding signage and/or crosswalks on the east side of Livingston and south side of Marie. Are the intersections ADA compliant? Director Beckwith is not sure but there is a trail on Marie so he will investigate the issue. Clpn. Bellows said we need to get people across safely. Clpn. Bellows would also like the east side of Marie looked at. There is no left turn with a light and this appears to be an issue. There are lots of people going westbound and it creates traffic issues with no arrow.

The City Council will have a table at the Open House on May 18 from 5:00 to 7:00 p.m. The open house is an opportunity for the public to learn more about city departments and other service organizations in our community.

There are marked manholes on Marie with green paint – are they adjusting the eight? The manholes are located between Charlton and Livingston. Director Beckwith will check on these.

Attorney Land and Manager Fulton are working on access agreements for Applebee's, The Guild, Inc. and 5-8 Club. They should be ready by Friday.

Fire Chief Mike Pott reminded all that the Fire Board will meet with West St. Paul and South St. Paul City Councils on April 26, 2016 at 6:00 p.m. at the Thompson Lodge, 2100 Stassen Lane. This is a great opportunity for everyone to learn what the fire department is doing.

5. Adjourn

The work session adjourned at 6:13 p.m.

David Meisinger
Mayor
City of West St. Paul

City of West St. Paul
Open Council Work Session
May 9, 2016

1. Roll Call

Mayor David Meisinger called the work session to order at 5:00 p.m.

Present: Mayor David Meisinger and Councilmembers Armon, Halverson, Bellows, Iago, Napier and Vitelli.

Others: City Manager Matt Fulton, Assistant City Manager and HR Director Sherrie Le, Community Development Director Jim Hartshorn, Police Chief Manila Shaver, Fire Chief Mike Pott, Finance Director Joan Carlson, Public Works and Park Director Ross Beckwith, Attorney Korine Land and City Clerk Chantal Doriott. Also present was John Wold of Wold Architects.

2. Review and Approve the OCWS Agenda

Council approved the work session agenda as presented but will hear the remodeling item first since there is a consultant in attendance.

3. Review the Regular Meeting Agenda

Council approved the regular meeting consent agenda with the following changes:

- CSO presentations will be held during proclamation session.
- Pull List of Claims from consent to discuss the muck invoice from the Robert Street project.
- Remove item 10.H. Orme Rental License since they failed the rental license inspection process.

4. Agenda Item(s)

4.B. Discuss City Hall Remodeling Project Scope

Council approved the hiring of Wold Architects and Engineers to design the remaining portion of the project and prepare bid specifications, as the estimated cost was roughly $200,000 at the time. This project involves two primary components and two optional sub-projects. The primary components were discussed with the City Council in the past.

Primary Components

1. Expand the lobby conference room westward with the goal of using that room for the Open Council Workshop, in addition to regular daytime usage. Adjacent to the newly expanded lobby conference room will be a smaller conference room that can be used by the Police Department to interview victims, witnesses and walk-ins instead of interviewing them in the open lobby area. Cost estimated at $87,000.

2. Repair and remodel locker rooms and bathrooms in the Police Department and downstairs. To keep the costs down, we are planning to use City staff to move older lockers downstairs, install tile in one bathroom, do all painting, and purchase carpet for one room. This is a "patch and match" project since it is short termed. Cost estimated for contracted work is $33,500.

Optional Sub-Projects

Option A

An optional part of the lobby conference room expansion work would be to add a sound-proof partition, so we can close off the former lobby conference room from the new addition, allowing for the new larger room to be used as two separate rooms when the larger room is not needed. Additional Cost estimated at $15,000.

Option B

Create an emergency exit in the back of the Council Chambers. Cut through the wall and install a back door in the chambers with a metal landing and stairs going down to a cement pad at ground level outside, and next to, the building. Cost estimated at $22,500.

Comments:

- Review of plans with Mr. Wold.
- Concerns of limited use and space constraints for public use. Director Le added comments and showed there are still areas for the public to use.
- Proposed interview room is standard.
- Could we consider roll-up walls? They would not be soundproofed.
- Wood deck versus metal to save some dollars.
- Check out having a partition that separates in the middle rather than a huge one that slides one way.

4.A. Net Ministries Rental License Applications

Attorney Korine Land gave an overview. Clpn. Bellows is a little too close to the issue so Clpn. Iago may be able to negotiate with Net Ministries on the Council's behalf. We are currently trying to negotiate all of their rental licenses. We can respond to some of their reactions at this time.

- Clpn. Vitelli concern is that we are setting a precedent with all these unrelated people living on the property.
- Clpn. Bellows is not opposed to Net Ministries holding training at this site. There are some matters that we have not addressed such as the Crusader property violates our current ordinance. You can have a maximum of ten individuals on site; per a parcel of property that is purchased. He is not comfortable with the longevity of this issue. We need to amend our ordinance. The current situation applies and is acceptable at the main campus and at the building on Crusader and incorporates the two buildings on Stryker. We need to amend this in a way that describes the ability to have church-related-people in a residential situation to

allow them to reside on the property and where there will be no other comparable situation. Look at Crusader property and we would allow up to 40 to 50 people but structure in such a way that it is based on square footage; possibly one person per a certain amount of square property. Entering into this agreement with the findings he disagrees with some of the facts and some of the individuals living there; there are more people there than we knew about. We need to make it work but in a way that we are not sitting there with people off campus separated from each other.

- Clpn. Napier met with them and he is concerned. Net Ministries abuts a residential neighborhood and single family homes and this is a dorm situation. He is concerned about the precedence being set.
- Discussion about Bidwell property and Stryker. Mayor Meisinger is not supportive of the Bidwell property; Stryker is fine.
- Clpn. Iago discussed other property the Ministries own along Stryker. Have they ever discussed putting on an extension? They have but it's been all talk. Ask yourself – how would you feel if this happened next to your home?
- More concern about precedence and that these homes come off the tax roll.
- Remember our staff gave verbal approval for ten folks to live in a house. We are clarifying the family definition now. Discussion about lessening the number of family members to live in a home. Further comment on getting the Bidwell property number lower, over time, would be helpful. Especially if they move some people out to Stryker and out of Bidwell. Clpn. Bellows added comment to support his favor. What if we replat this site with three residential lots. Attorney Land said that is in the plan but we need to amend our ordinance to clarify the number of people living in each unit/house.
- Clpn. Vitelli maybe we need to buy back the Stryker and Bidwell properties and they have to start over. Someone made a mistake in giving a verbal approval. We need to fix this.
- Clpn. Iago will sit down with Mark (Net Ministries) and discuss this discussion and will bring back to Council what was discussed. Clpn. Napier is willing to help. Attorney Land would rather it just be Clpn. Iago.
- Manager Fulton suggested Director Boike attend in case there are code issue discussions. Comment about having Net Ministries sell their own property.
- Mayor Meisinger asked Clpn. Iago to contact Director Boike and meet with Net Ministries.

4.C. Discussion Regarding Establishment of Robert Street Special Services District

A Special Services District is a tool that is essentially a special assessment. It allows businesses to petition to organize for the purpose of assessing costs against themselves for special services and amenities received. In the case of Robert Street, this would relate to the upkeep and maintenance of the streetscape amenities, snowplowing, banners and flags, and collaborative marketing. With the consistent design scheme of the entire corridor, it is important that marketing and streetscape maintenance be done consistently as well.

The types of activities that could be incorporated into a special services district include:

- Sidewalk snow removal (already assessed to part of the corridor)
- Landscape maintenance
- Decorative lighting
- Banner purchase and installation

- Collaborative marketing
- Special events

Any district established would likely involve a City's partnership in several regards, including the replacement and repair of damages light standards or landscaping, assistance in hanging banners/flags and solid waste pickup. The budget would reflect the level of maintenance and marketing desired by the corridor business members.

The establishment of a special servics district requires a petition supported by 25% or more of property owners along the corridor and 25% or more of the tax capacity along the corridor. Before the City can impose any charges, a public hearing is required and notices must be mailed directly to the property owners.

If the District is established, there would be a Board of Directors which would work on the development of a budget that would be assessed to properties within the District annually by the City. One of the key benefits of a district would be the collaborative marketing and maintenance approach for the entire corridor. This is very important for the revitalized corridor in order to maximize opportunities to promote and support a vibrant business community.

If the City Council elects to not support the establishment of a special services district, the cost of streetscape maintenance would fall upon the City property tax levy and marketing efforts would be fragmented. It would be expected that additional City public works resources would be necessary, unless the additional services were contracted out.

Comments:

- Mayor Meisinger is not in favor. There is not a lot to be done with maintenance and collaborative marketing; this is a waste of time. The corridor is split in 4 places so how could the entire corridor agree. Also, we have staff in place for maintenance.
- Clpn. Bellows is not in favor unless half of the people abutting are in favor.
- Clpn. Halverson the businesses and representatives were looking forward to the special district was what she remembers. She assumes SRSBA will be a part of this collaboration.
- Clpn. Napier remembers this idea being accepted by a majority of the business owners. We should get their feedback again. The options are that we maintain the median, sidewalks, and SRSBA would do banners, etc.
- Let's find out if the business owners are in favor of setting up a district.
- We are spending a lot of money on the corridor and Clpn. Vitelli would like it swept more than once a year, and no weeds growing on sidewalks and in the median. It would be nice to have banners along the street, etc. He is in favor of taking care of it. Mayor Meisinger said there is time for our staff to take care of and maintain the corridor.
- Let's see how other cities deal with a similar issue: Red Wing, St. Peter, and White Bear Lake.
- SRSBA does (maintain) the first four items on your list.

4.D. Permit Parking, Ordinance Change Proposal

Police Chief Shaver gave an overview. Clpn. Halverson would like to hear from the residents who are not in attendance. Chief Shaver continued his presentation and overview. This originally started with the reconstruction of Robert Street along with the reduction of Robert Street parking. Other factors have caused some unintended consequences, especially with on-street parking. Residents in the area of Livingston and Bernard Avenues are one group that has expressed a concern regarding the growth of on-street parking in front of their homes since the elimination of Robert Street parking.

The police department conducted a study of vehicles parked in the vicinity of Livingston and Bernard and noted a variety of parking patterns to include vehicles listed to residents of nearby Livingston addresses, vehicles that were overnight visitors of Livingston residents, company owned and borrowed vehicles used by Livingston residents, and a number of vehicles listied to the Emerson Hill Apartments, 993 Robert Street.

It is suspected the residents of Emerson Hill Apartments are parking on Livingston Avenue for a number of reasons to include: a lack of sufficient off-street parking at the apartment complex; the cost of parking at the apartment complex; apartment dwellers having additional vehicles per family unit and/or guests; and the elimination of Robert Street parking.

There are 35 living units in the Emerson Hill building; with 53 underground parking stalls and 8 outside spaces, resulting in 1.7 parking stalls per unit. Current zoning ordinance requires two stalls per unit which means Emerson Hills should have 70 stalls instead of their 61 spaces. Emerson Hill is not the only apartment complex with this issue. There are several apartment complexes in the City that when constructed most families had only one vehicle, thus one parking space per living unit. Today, considering guests and other factors, the two parking spaces per living unit is sometimes not enough. It needs to be noted that Emerson Hill was a “Planned Development” which means zoning codes are flexible and variances are not required.
The limited number of parking spaces is further aggravated by an added expense to park in the Emerson Hill apartment’s underground garage or in one of their outside parking spots. Residents have cited amounts between $45 and $80 per month to park at the complex. Staff cannot get the apartment owner to return calls to confirm these amounts. No matter the amount, a number of residents stated they are parking on a city street to reduce their monthly expenses.

To mitigate parking issues the Council requested staff to research and propose a permit parking response. Permit parking is not uncommon in the metro area.

Comments:

- Concerned about same problem from other folks in the area.
- Clpn. Halverson could agree but we had a similar situation and we posted signs and that was the end of the parking issues. Mayor Meisinger believes people will park right across the street and we better have a back-up plan.
- George Sherman told Director Hartshorn the underground spaces have been purchased. He said he would consider allowing parking in the other parking lot, to be constructed later this year. Clpn. Halverson said she spoke with him and it is not a good option. Director Hartshorn will try to discuss this will Sherman again.
- Consensus to move forward and get feedback through a public hearing from those in the area. Chief Shaver asked who should be invited to the public hearing.

- Consider ordinance and have Sherman clarify parking.
- Consider temporary ordinance as a pilot project and hold a public hearing in two weeks.

4.E. Celebrate WSP Days Events

The WSP Days Committee put together a list of upcoming events. These events have been noticed for a possible quorum. Mark Tessmer thanked Council and staff for their help in getting these events approved. Mark introduced Jennifer Baltes and Dave Wenda who were major event organizers. More information about the events is posted on Celebrate West St. Paul website.

May 18: City of West St. Paul Open House at the Municipal Center, 1616 Humboldt Ave., 5:00 to 7:00 p.m.

May 19 to 22: Carnival at Signal Hills, South Robert Street and Butler Avenue; Thursday 3:00-10:00 p.m., Friday 3:00-11:00 p.m., Saturday 11:00 a.m.-11:00 p.m., and Sunday 12:00- 6:00 p.m. Unlimited rides $20.00 Friday and Sunday.

May 20: Street Dance at Dunham's, 173 Lothenbach Ave., 7:00 to 11:00 p.m.

May 21: Family Fitness Fair at Moreland Elementary, 217 Moreland Ave., 9:30 to 11:30 a.m.

May 21: Celebrate West St. Paul Grand Parade; Starting at 1:00 p.m. (same route as last year)
Visiting Royalty, pre-parade, begins at 11:00 a.m., in the Heritage E-Stem school gymnasium

May 21: Harmon Park Festival at Harmon Park, 230 Bernard Street W, 2:00 to 10:00 p.m.
Join us for tons of fun activities including bingo, pull tabs, concessions, refreshments, fireworks, and more. The band Way Back Machine will be playing on stage from 2:30 to 6:00 p.m., fireworks will start at approximately 9:15 p.m.

May 21: Rock the Barn Farm Festival, Dodge Nature Center, 365 Marie Ave. W, 3:00 to 7:00 p.m.

May 22: Kiwanis Pancake Breakfast, YMCA, 150 Thompson Avenue E, 7:00 a.m.-1:00 p.m. ($6.00 for adults and $3.00 for children under 12. This includes a silent auction from 7:00 a.m.-12:30 p.m.)

May 22: Farewell Luncheon, Dakota Lodge at Thompson Park, 1200 Stassen Lane, 1:00 to 4:00 p.m.

5. Adjourn

The work session adjourned at 6:25 p.m.

David Meisinger
Mayor
City of West St. Paul

City of West St. Paul
City Council Meeting Minutes
May 9, 2016

1. Call to Order

Mayor David Meisinger called the meeting to order at 6:30 p.m.

2. Roll Call

Mayor David Meisinger and Councilmembers Ed Iago, Pat Armon, Jenny Halverson, John Bellows, Dave Napier and Dick Vitelli.

Others: City Manager Matt Fulton, Assistant City Manager and HR Director Sherrie Le, Attorney Korine Land, Finance Director Joan Carlson, Community Development Director Jim Hartshorn, Police Chief Manila Shaver, Public Works and Parks Director Ross Beckwith and City Clerk Chantal Doriott.

3. Pledge of Allegiance

4. Adopt the Agenda

Motion was made by Clpn. Bellows and seconded by Clpn. Halverson to adopt the agenda with the following modifications:

- 10J move to proclamation item f
- Remove 10 h rental license
- Add 13b soil correction change order

All members present voted aye. Motion carried.

5. OCWS Briefing

Mayor Meisinger gave an overview of what was discussed at the Council work session prior to the regular meeting:

- Discussion regarding city hall renovation
- WSP Days events
- Discussion on special assessment for Robert Street
- Parking off of Robert street

6. Robert Street Review

Director Ross Beckwith gave an update:

- Applebee's, Arbys and 5-8 Club and Guild, Inc. will have temporary access.
- Updates are available on the website and via email.

Clpn. Napier said at Livingston and Wentworth is a 4-way stop; Wentworth is a county road and previously there was an analysis of the intersection. There was concern with county on staking into major roads. They feel that the changes we made delays have decreased and it will not become an all-way stop at this time.

Clpn. Bellows comments on the same intersection at Livingston and Wentworth – the reason he waited is there was an accident that further exacerbated the situation.

Clpn. Vitelli is there a "caution" sign that we can place that warns people if you are coming from the west to the east on Wentworth you are notified of construction. Director Beckwith said staff will look into that.

7. Citizen Comments

Jennifer Baltes and Dave Wenda spoke about Celebrate West St. Paul Days. They appreciated all the assistance they received from staff and Council this year. Detailed information can be found at www.CelebrateWestStPaul.com. Theme this is year is *Celebrate Our Local Heroes*. Our Grand Marshalls are Michelle, Erin and Amy Patrick – Officer Scott Patrick's Family. Mayor and Council thanked the committee for their work on this fun community event.

May 18: City Open House, 5:00 to 7:00 p.m.
May 19: Carnival at Signal Hills begins
May 20: Street Dance at Dunham's from 7:00 to 11:00 p.m.
May 21: Family Fitness Fair at Moreland, 9:30 to 11:30 a.m.
May 21: Parade starts at 1:00 p.m. and ends at Harmon Park
May 21: Harmon Park Festival after parade ends – fireworks, food vendors, beer, bingo, and more.
May 21: Rock the Barn at Dodge Nature Center from 3:00 to 7:00 p.m.
May 22: Kiwanis Pancake Breakfast at YMCA from 7:00 a.m. to 1:00 p.m. includes Silent Auction.
May 22: Farewell Luncheon for the Royalty at Thompson Park from 1:00 to 4:00 p.m.

8. Council Comments

Clpn. Napier said the Environmental Committee collaborated with Garlough Elementary Magnet School to hold an Explorer Fair this Friday, May 13 from 5:00 to 7:00 p.m. Participants will enjoy a variety of activities. Thanks to Southview Garden Center for their tree donation. Also, there is a link to an article about volunteer and paid fire department personnel and how they contribute to our community. Check it out on our city website.

Clpn. Iago said the I/I project deals with sewer coming out of your home into the main system. Residents were recently mailed a Benjamin Franklin Plumbing Company letter that is filled with inaccurate information. The Met Council has been informed about this letter and if you receive anything from Benjamin Franklin Plumbing it is not accurate. Manager Fulton will look into this as well.

Clpn. Armon urged the public to call elected officials and tell them to support $12 million for Robert Street: David Hahn 651-296-1749 and Joyce Pepin 651-296-7806. Also, kudos to the

amazing St. Stephen Scout Troop #48. The leaders who have assisted with the scouts are amazing.

Clpn. Halverson said thanks to members in the audience for bringing all of the kids and brightening our evening.

Clpn. Bellows thanked staff for access to Livingston Street and work on the Shop Robert program. Thank you to the police department and public works for the work on Marie and Livingston intersection which has been striped for pedestrians.

Mayor Meisinger will be attending the Westwood Ridge "Pie in the Face" fundraiser in conjunction with WSP Days Celebration events. The City's annual open house is May 18th at City Hall from 5:00 to 7:00 p.m.

9. Proclamations, Presentations and Recognitions

A. Introduce New Police Officer and Community Service Officers

Police Chief Shaver introduced two new CSO's Nolan Cornell and Sammy Thoeut. The Chief also swore in two new police officers: Aleck Williams and Craig Baumeister. The Mayor and Councilmembers welcomed all of the new police personnel with a round of applause.

B. Jane Nordin Day

Mayor David Meisinger and Councilmembers recognized Jane Nordin for being a loyal educator and friend to many in our community and proclaimed May 6 as Jane Nordin Day in West St. Paul. The complete proclamation is attached to these minutes.

C. SRSBA Donation

Director Carlson gave an overview of a $150.00 donation that SRSBA gave to feed the volunteers who assisted with our Earth Day clean-up that Clpn. Armon organized.

Motion was made by Clpn. Armon and seconded by Clpn. Napier to adopt Resolution No. 16-42 and graciously accept the $150.00 donation from the South Robert Street Business Association. All members present voted aye. Motion carried.

D. Walmart Donation

Police Chief Shaver gave an overview of Walmart's $2,000 donation for police department programs.

Motion was made by Clpn. Vitelli and seconded by Clpn. Armon to adopt Resolution No. 16-43 and graciously accept the $2,000.00 donation from Walmart for police programs. All members present voted aye. Motion carried.

E. WSP Commercial Club Donation

City Manager Matt Fulton gave an overview of the $1,000.00 donation from the WSP Commercial Club for the Art on the Avenue Color Dash Run. Art on the Avenue will be held on July 23 from 4:00 to 8:00 p.m. at Dodd Park on Smith Avenue from Butler to Annapolis.

Motion was made by Clpn. Armon and seconded by Clpn. Vitelli to adopt Resolution No. 16-44 and graciously accept the $1,000.00 donation from the WSP Commercial Club for the City's annual Art on the Avenue Color Dash event on July 23 from 4:00 to 8:00 p.m. All members present voted aye. Motion carried.

Police Reserves Update

Police Chief Manila Shaver introduced Lt. Mark Crowley who oversees the police reserves. Lt. Crowley explained the reserve program has been in existence for 19 years and he has served for 17 years. Lt. Crowley introduced Sgt. Hinderscheid and Officer Reynolds and other Reserve Officers in attendance. A detailed presentation was given and is available on the city website. Clpn. Napier said on behalf of all the organizations that benefit from your services, thank you very much. Mayor and Councilmembers and staff and those in attendance gave a resounding round of applause.

10. Consent Agenda

A. City Council Meeting Minutes of April 25, 2016
B. City Licensing
C. Resolution No. 16-45 Reauthorize Membership in the 4M Fund
D. Resolution No. 16-46 Dakota County Domestic Preparedness JPA, Renewal
E. Resolution No. 16-41 BCA Master Agreement, Renewal
F. Resolution No. 16-40 Criminal Justice Data Network Subscriber Agreement Renewal
G. City Licensing - Celebrate West St Paul Special Event
H. City Rental Licensing
I. List of Claims with item # 121829 removed for individual consideration – item 13.B.
J. Police Reserve Annual Report
K. AT&T / Cingular Wireless Lease Agreements
L. Temporary Construction Easement Agreements

Motion was made by Clpn. Vitelli and seconded by Clpn. Armon to approve the consent agenda items listed above. All members present voted aye. Motion carried.

11. Public Hearing

A. Assessment Hearing for Unpaid Invoices

Finance Director Joan Carlson gave an overview

Council comments:

- Clpn. Iago asked how often this is done – twice per year. Occasionally a real estate transaction gets caught and Clpn. Iago would like to offer assistance. Director Carlson

said a person should contact the County and City for assessment information. Title insurance is available to a person purchasing a home said Director Carlson. Clpn. Iago asked about alarm call unpaid fees. Chief Shaver offered information on these calls and charges.

Open public hearing at 7:25 p.m.

- Former property owner of 355 Bernard objects to her assessment amount.
- Property owner of 882 Stryker explained his objection to this property assessment. He did not have any knowledge of the bills as the property was in foreclosure and owned by a bank. He is contesting the assessment and asked for a deferral until this is taken care of.

Clpn. Halverson would like to remove the assessment and give the owner at 882 Stryker 90 to 120 days. Clpn. Vitelli would like to give him until July 31 to rectify the situation.

- Mary (355 Bernard) asked about time that she was forbidden to be on the property. His (882 Stryker) issue is different because he was not the owner. You were the owner and you will need to file the appeal.
- Mr. Goldberg, 1254 and 1260 South Robert Street wanted to appeal and request a delay for a rental property he owns. This item will be heard in court on June 27.

Clpn. Bellows is not sure about delaying the process as this is a civil matter. Director Carlson believes there is a small amount of time to pay the invoice before it's assessed to the tax roll. Clpn. Iago agrees with Clpn. Halverson with a new homeowner he is comfortable with deferring. Clpn. Halverson said she does not believe we are interfering with the matter.

The public hearing closed at 7:43 p.m.

Motion was made by Clpn. Napier and seconded by Clpn. Halverson to approve adoption of the assessment list excluding and deferring 882 Stryker to July 25, 2016 for final consideration. All members present voted aye. Motion carried.

B. First Reading - Zoning Ordinance Amendment, Section 153.004 Regarding the Definition of Family - City of West St. Paul

Community Development Director Jim Hartshorn gave an overview Attorney Land added that the code currently has two definitions and this amendment will help to define our zoning code. Councilmembers offered various comments. Clpns. Halverson and Bellows and Iago are not quite in favor. Clpn. Vitelli is in favor and supports the proposed ordinance. Clpn. Halverson said we need to pay attention to the larger issues. Clpn. Vitelli asked what you would change. Clpn. Halverson said if something happened to my sibling and my nephews had to live with me they couldn't with this new proposal.

The public hearing opened at 8:00 pm.

Michelle Pivec, 998 Livingston Ave., as a resident and human being she is not in favor of the ordinance amendment and agrees with Clpn. Halverson.

The public hearing closed at 8:01 p.m.

Attorney Land explained that she and staff have reviewed other city definitions including the state, for family, and there are no clear answers.

Motion was made by Clpn. Halverson and seconded by Clpn. Armon to deny the first reading of a Zoning Ordinance Amendment, Section 153.004, regarding the definition of a family and continue discussion and consideration of an amendment. Clpns. Armon, Halverson, Iago, Napier and Vitelli voted aye. Clpn. Bellows voted no. The motion carried.

12. New Business

A. First Reading - City Ordinance Amendment, Section 92.02 regarding residential trash storage and temporary outdoor storage containers - City of West St. Paul

Community Development Director Hartshorn gave an overview.

Comments:

- Clpn. Napier supports the amendment.
- Clpn. Iago would like to split the two – he is in favor of item 2 but not item 1. Item 1 is not enforceable.
- Clpn. Halverson agrees with Clpn. Iago.
- Clpn. Napier's point is if someone's container is left in the driveway someone will call and with the ordinance change, you will have support. You have to have something like this to have regulation otherwise the trash container could be in the driveway for a week.
- Clpn. Bellows said this is less restrictive than the current ordinance. This seems more enforceable than the current ordinance. What's proposed is that we don't have any limitation on trash pick-up. This is a reasonable compromise of what we have now.
- Clpn. Vitelli is in favor
- Director Hartshorn explained that staff would send a citation letter if someone was in violation. Staff will most likely get the recurring offenders because this is an ongoing problem and he does not see it as a hard issue to regulate and this amendment would be helpful. The storage pods have gotten out of hand in the last few years and we need regulation. Clpn. Iago is in favor of pod regulation.

Motion was made by Clpn. Vitelli and seconded by Clpn. Armon to approve the first reading of an Ordinance amendment to Section 92.02 regarding residential trash storage and temporary outdoor storage containers (pods). Clpns. Armon, Halverson, Napier, Bellows and Vitelli voted aye. Clpn. Iago voted no. The motion carried.

B. City Licensing - Outdoor Live Entertainment

Police Chief Shaver gave an overview of the live outdoor entertainment license for Dunham's to hold an event on May 20, 2016 from 7:00 to 11:00 p.m. in conjunction with the WSP Days Celebration.

Motion was made by Clpn. Bellows and seconded by Clpn. Armon to approve the Outdoor Live Entertainment license for Dunham's to hold an event in conjunction with WSP Days. All members present voted aye. Motion carried.

C. Approve Easement Agreements for Safe Routes to School Project 14-6

Director Beckwith gave an overview of easement agreements needed for the Safe routes to School project on Wentworth Avenue and Bellows Street. There are permanent and temporary easements needed at this time.

Clpns. Napier and Vitelli asked questions. Clpn. Halverson thanked staff for working on this project as did the other Councilmembers. Clpn. Bellows is in favor of this project and request.

Motion was made by Clpn. Bellows and seconded by Clpn. Vitelli to approve the easement agreements for the Safe Routes to School project #14-6 as presented. All members present voted aye. Motion carried.

D. Award Bid for Lift Station 5 & 6 Project #16-2

Director Beckwith gave an overview of two bids for the Lift Station 5 & 6 Rehabilitation and Force Main Project which were opened and read aloud on Wednesday, May 4. The bids are shown below along with the engineer's estimate:

Bidder	Base Bid
Pember Companies, Inc.	$1,102,773.00
Geislinger & Sons, Inc.	$1,189,000.00
Engineer's Estimate	$1,730,000.00

Motion was made by Clpn. Armon and seconded by Clpn Halverson to accept the bids as presented and approve a construction contract with Pember Companies, Inc. in the amount of $1,102,773.00 for the Lift Station 4 and 6 Project #16-2. All members present voted aye. Motion carried.

13. Old Business

A. First Reading Vote for I/I Ordinance Amendment

Manager Matt Fulton gave an overview and explained that at the last meeting the Council had discussed an I/I ordinance amendment at length but neglected to formally approve the first reading. A public hearing has been noticed for May 23 during the regular Council meeting.

Motion was made by Clpn. Vitelli and seconded by Clpn. Halverson to approve the first reading of an Ordinance amendment for the Inflow/Infiltration issue. All members present voted aye. Motion carried.

Clpn. Napier added that we received an email from a realtor and those concerns will be addressed during the public hearing on May 23. The public hearing is opened to the public so if anyone wishes to comment on the proposed ordinance changes, they can be heard during the public hearing.

B. SRF Invoice – Change order for soil correction work performed (removed from consent agenda)

Mayor Meisinger gave an overview and asked for copy of an RFP that was sent to get the contract started. The City hired Braun to do soil borings. Braun completed the work and the City sent the information to SRF. This is where problems begin. Currently, we are almost $1.3 million over project costs due to soil correction work. The City hired TKDA to review the tickets (muck removal and sand fill) and they can't determine whether they removed muck. Director Beckwith said he was not involved with the review/audit.

If it wasn't muck why did we take it out and sell it. This is concerning that we had a design and there was no money allotted for soil corrections. SRF needs to be held accountable and they are not getting him (Mayor) information.

Comments:

- The Councilmembers and Mayor are upset. Mayor Meisinger read Braun's understanding of the soil borings. Mayor believes there is a design issue. Clpn. Halverson agrees and said she is equally upset.
- Clpn. Armon asked Attorney Land if we decide not to pay SRF what might generate legally. Attorney Land said the city is obligated to make payment for work performed. Continuing this matter for another 2 weeks would not hamper the issue.
- Clpn. Napier said it makes it more difficult that the engineer on staff is no longer with us.
- Clpn. Iago added comments about the tickets and audit. We required an audit and there is not a clear answer. So many things the Mayor has asked for have not been forthcoming. Manager Fulton said we are missing the RFP. Clpn. Iago is upset about how SRF is handling many issues. We need to find answers.

Motion was made by Clpn. Vitelli and seconded by Clpn. Halverson to continue payment of the SRF invoice to a future meeting. All members present voted aye. Motion carried.

14. Adjourn

Motion was made by Clpn. Vitelli and seconded by Clpn. Napier to adjourn the meeting at 8:40 p.m. All members present voted aye. Motion carried.

David Meisinger
Mayor
City of West St. Paul

TO: Mayor and City Council

THROUGH: Matt Fulton, City Manager

FROM: Joan Carlson, Finance Director

DATE: May 23, 2016

SUBJECT: List of Claims

City of West St. Paul

BACKGROUND INFORMATION:

Invoices to be paid

FISCAL IMPACT:

$1,729,452.53

STAFF RECOMMENDATION:

Approve payment of attached

CITY OF WEST ST PAUL

Summary of List of Claims

Council Meeting of May 23, 2016

PAYROLL CHECK REGISTER:

Payroll Period	4/25/16 - 5/8/16	
Date Paid	5/13/2016	$144,743.14
Direct Deposit		
Payroll Period		
Date Paid		
Direct Deposit		
TOTAL NET PAYROLL		$144,743.14

DISBURSEMENT CHECK REGISTER:

Checks	121847 - 121954	$1,577,372.45
EFTS	840 - 853	$7,336.94
TOTAL DISBURSEMENT CHECKS		$1,584,709.39

TOTAL PAYROLL, DISBURSEMENTS, ACH AND WIRE TRANSFERS $1,729,452.53

CITY OF W.S.P

Payment Register

From Payment Date: 5/4/2016 - To Payment Date: 5/23/2016

Number	Date	Payee Name	Transaction Amount
AP - Accounts Payable			
Check			
121847	05/09/2016	SFDMG, LLC	$5,948.40
121848	05/18/2016	BOND TRUST SERVICES	$9,950.00
121849	05/18/2016	LAW ENFORCEMENT LABOR	$1,210.71
121850	05/18/2016	MN TEAMSTERS LOCAL #320	$1,099.00
121851	05/23/2016	A B C RENTAL	$31.95
121852	05/23/2016	ADVANCED ENGINEERING &	$15,346.86
121853	05/23/2016	AIRTECH THERMEX	$330.00
121854	05/23/2016	APOLLO, LLC	$580.00
121855	05/23/2016	APOLLO, LLC	$14,420.00
121856	05/23/2016	ASTRO TURF, LLC	$7,200.00
121857	05/23/2016	B T DESIGN	$1,738.00
121858	05/23/2016	BAUER BUILT INC	$1,118.13
121859	05/23/2016	BCA CJTE	$480.00
121860	05/23/2016	BEACON ATHLETICS	$1,796.88
121861	05/23/2016	BGMN, INC	$504.00
121862	05/23/2016	BOLTON & MENK INC	$2,627.00
121863	05/23/2016	BOND TRUST SERVICES	$450.00
121864	05/23/2016	BRAUN INTERTEC CORPORATION	$500.00
121865	05/23/2016	BRUSTAD, MARJORIE	$906.00
121866	05/23/2016	BSN SPORTS INC	$1,721.99
121867	05/23/2016	CALIBRE PRESS	$329.00
121868	05/23/2016	CAPITOL BEVERAGE SALES	$129.60
121869	05/23/2016	CAPRA'S UTILITIES	$6,775.00
121870	05/23/2016	CEDAR CREST ICE CREAM	$221.41
121871	05/23/2016	CHIEF SUPPLY CORPORATION	$685.49
121872	05/23/2016	CINTAS UNIFORMS	$120.40
121873	05/23/2016	COMMERCIAL ASPHALT COMPANY	$1,899.12
121874	05/23/2016	CONCEPT FIRE PROTECTION	$275.00
121875	05/23/2016	CONDOR CORPORATION	$2,150.00
121876	05/23/2016	CRAWFORD DOOR SALES	$177.50
121877	05/23/2016	CUB FOODS	$13.48
121878	05/23/2016	DAKOTA COUNTY FINANCIAL SERV	$1,371.27
121879	05/23/2016	DAKOTA COUNTY TREASURE-	$125.00
121880	05/23/2016	DAKOTA COUNTY TREASURE-	$250.00
121881	05/23/2016	DAKOTA COUNTY WARRANTS	$130.00
121882	05/23/2016	DAMA CO	$594.00
121883	05/23/2016	DANNER INC	$46,846.09
121884	05/23/2016	DEERE & COMPANY	$8,672.50
121885	05/23/2016	EHLERS & ASSOCIATES	$1,140.00
121886	05/23/2016	EMERGENCY AUTOMOTIVE TECH	$663.78
121887	05/23/2016	ERICKSON, JERRY	$1,421.25
121888	05/23/2016	ERICKSON, DIANE	$38.88
121889	05/23/2016	EUREKA CONSTRUCTION	$945,272.31
121890	05/23/2016	FLEETPRIDE	$116.75
121891	05/23/2016	FOREMOST PROMOTIONS	$226.39
121892	05/23/2016	GARY L FISCHLER & ASSOCIATES,	$545.00
121893	05/23/2016	GENERAL SECURITY SERVICES	$513.60
121894	05/23/2016	GOODIN COMPANY	$517.56
121895	05/23/2016	GOPHER STATE ONE-CALL	$391.50
121896	05/23/2016	GRAINGER INC	$6.32

CITY OF W.S.P

Payment Register

From Payment Date: 5/4/2016 - To Payment Date: 5/23/2016

121897	05/23/2016	HEALTHEAST MEDICAL TRANSPORT	$170.00
121898	05/23/2016	HENNEPIN COUNTY WARRANTS	$500.00
121899	05/23/2016	INVER GROVE FORD	$196.47
121900	05/23/2016	JIM MURR PLUMBING	$888.65
121901	05/23/2016	JJ TAYLOR DIST. OF MN	$75.00
121902	05/23/2016	KEEPRS, INC	$2,407.00
121903	05/23/2016	LANGUAGE LINE SERVICES	$394.88
121904	05/23/2016	LEVANDER, GILLEN & MILLER	$46,562.92
121905	05/23/2016	LILLIE SUBURBAN NEWSPAPERS	$340.65
121906	05/23/2016	LMCIT	$769.33
121907	05/23/2016	LOGIS	$2,713.00
121908	05/23/2016	LOWE'S RETAIL STORE	$122.55
121909	05/23/2016	LUMBY/DARRIN	$71.89
121910	05/23/2016	MCQUILLAN BROS PLUMBING	$31,855.04
121911	05/23/2016	MENARDS	$903.71
121912	05/23/2016	METROPOLITAN COUNCIL	$138,214.18
121913	05/23/2016	MIDWEST PLAYSCAPES	$1,744.82
121914	05/23/2016	MINNEAPOLIS OXYGEN CO	$98.78
121915	05/23/2016	MISTER CAR PARTNERS	$105.84
121916	05/23/2016	MN DEPT OF LABOR & IND-CODE/IN	$10.00
121917	05/23/2016	MN DEPT OF TRANS-COMMISIONER	$701.18
121918	05/23/2016	MN GLOVE	$121.90
121919	05/23/2016	MN LOCKS	$21.00
121920	05/23/2016	MN OFFICE OF ADMIN HEARINGS	$32.00
121921	05/23/2016	MSANI	$150.00
121922	05/23/2016	NARDINI FIRE EQUIPMENT	$496.00
121923	05/23/2016	NORTHERN TOOL & EQUIPMENT	$261.62
121924	05/23/2016	O'REILLY AUTOMOTIVE, INC	$568.69
121925	05/23/2016	OAKDALE RENTAL	$189.00
121926	05/23/2016	PALANISAMI & ASSOCIATES	$3,924.00
121927	05/23/2016	PALMEN, RONALD & PALMEN,	$7,500.00
121928	05/23/2016	PETCO ANIMAL SUPPLIES	$89.94
121929	05/23/2016	PROFESSIONAL WIRELESS COMM	$746.12
121930	05/23/2016	REGENCY BUSINESS SOLUTIONS	$242.40
121931	05/23/2016	RUFFRIDGE JOHNSON EQUIP CO	$125.60
121932	05/23/2016	SAM'S CLUB DIRECT	$405.79
121933	05/23/2016	SELECTACCOUNT	$147.70
121934	05/23/2016	SEWALD/TIM	$42.14
121935	05/23/2016	SFDMG, LLC	$5,711.21
121936	05/23/2016	SNAP ON TOOLS	$269.95
121937	05/23/2016	SOUTH METRO FIRE DEPT	$177,116.17
121938	05/23/2016	SOUTHVIEW GARDEN CENTER INC	$112.50
121939	05/23/2016	SPIRIT MASTER FUNDING VI, LLC	$8,800.00
121940	05/23/2016	SPRWS	$1,338.06
121941	05/23/2016	SYLVESTER, JOANNE	$780.00
121942	05/23/2016	T G LANDSCAPING & CONST	$592.00
121943	05/23/2016	TRANSUNION RISK & ALTERNATIVE	$27.25
121944	05/23/2016	TRI STATE BOBCAT INC	$150.00
121945	05/23/2016	TROJE'S TRASH PICK-UP SERVICE	$394.10
121946	05/23/2016	TWIN CITY JANITOR SUPPLY	$282.05
121947	05/23/2016	UNIFORMS UNLIMITED	$1,268.75
121948	05/23/2016	VERSATILE VEHICLES, INC	$625.00
121949	05/23/2016	WAL-MART REAL ESTATE	$2,400.00
121950	05/23/2016	WELLS FARGO BANK NA	$16.00

CITY OF W.S.P

Payment Register

From Payment Date: 5/4/2016 - To Payment Date: 5/23/2016

121951	05/23/2016	WILHARBER, ORONELL	$853.20
121952	05/23/2016	WOLD ARCHITECTS & ENGINEERS	$4,612.50
121953	05/23/2016	XCEL ENERGY	$25,060.14
121954	05/23/2016	ZAN ASSOCIATES	$13,476.66
Type Check Totals:			$1,577,372.45
EFT			
840	05/17/2016	ANCHOR BANK OF W. ST PAUL	$48,922.36
841	05/17/2016	I C M A	$150.00
842	05/17/2016	I C M A RETIREMENT TRUST-457	$7,811.82
843	05/17/2016	MII LIFE --- VEBA	$3,091.92
844	05/17/2016	MN DEPARTMENT OF REVENUE	$9,933.97
845	05/17/2016	MSRS - 457	$1,915.00
846	05/17/2016	MSRS HCSP	$2,186.36
847	05/17/2016	PUBLIC EMPLOYEES RETIRMNT	$45,545.66
848	05/17/2016	MII LIFE --- VEBA	$1,452.69
849	05/23/2016	MN STATE TREASURER	$3,193.00
850	05/23/2016	SELECTACCOUNT	$36.35
851	05/23/2016	SELECTACCOUNT	$1,336.41
852	05/23/2016	ANCHOR BANK OF W. ST PAUL	$197.24
853	05/23/2016	US BANK CARDMEMBER SERVICES	$7,336.94
Type EFT Totals:			$133,109.72

TOTAL CHECKS & EFTS $1,710,482.17

2016 CREDIT CARD PURCHASES 3/12-4/12/16

3/26/16	Matt Swenke	Ecollaratech	38.00	new collar for "Doc"
3/27/16	Matt Swenke	Amazon.com	17.93	book- K-9 training
3/27/16	Matt Swenke	Amazon.com	1.27	sales tax exempt
3/28/16	Matt Swenke	Staples	199.96	4 flashdrives
3/28/16	Matt Swenke	Staples	14.25	sales tax exempt
4/7/16	Matt Swenke	Evident Inc	317.61	evidence supplies
3/14/16	Brian Sturgeon	Specialized Armament	979.20	ammo
3/15/16	Brian Sturgeon	Paypal MACIA	50.00	training Symposium
3/30/16	Brian Sturgeon	Best Buy	569.99	new computer/squad #670
3/30/16	Brian Sturgeon	Best Buy	569.99	new computer/squad #670
3/30/16	Brian Sturgeon	Brownells Inc	1,463.58	shotgun night sights
3/31/16	Brian Sturgeon	Mark's Towing	133.91	moving of forfeited vehicle
4/6/16	Brian Sturgeon	Vikings Tactics	185.48	night sights replacement
3/22/16	Dave Schletty	Office Max	(60.00)	credit for product on sale
3/17/16	Dave Schletty	Office Max	359.99	new office chair
3/18/16	Dave Schletty	Wal-Mart	144.83	Easter Celebration
4/8/16	Dave Schletty	Paypal - Easternperf	108.95	cleaning supplies for arena
3/16/16	Duane Schneider	Crown Lift Trks	150.85	steer wheel assy
3/16/16	Duane Schneider	Crown Lift Trks	10.75	sales tax exempt
3/23/16	Duane Schneider	Felling Trailers	57.67	trailer spring
3/31/16	Chantal Doriott	Eco- Products	(38.26)	credit for sales tax
3/15/16	Chantal Doriott	Eco- Products	130.54	plates
3/21/16	Chantal Doriott	Courtyard by Marriott	397.83	Clerk's conference
4/2/16	Chantal Doriott	Eco- Products	127.86	cups/knives
4/11/16	Chantal Doriott	Culver's	70.34	council meeting refreshments
3/14/16	Bud Shaver	Specialized Armament	368.95	upper carry handle assmbly
3/14/16	Bud Shaver	Dollartree	7.50	props for facebook post
3/30/16	Bud Shaver	Optics Planet Inc	717.90	tactical entry bags
4/4/16	Bud Shaver	Big Supply Shop	395.43	specialized binoculars
4/8/16	Bud Shaver	Little Caesars	32.14	Moreland School Pizza party
3/11/16	Sherrie Le	Staples	53.99	heavy weight coated paper
3/11/16	Sherrie Le	Staples	3.85	sales tax exempt
3/17/16	Sherrie Le	Discount Mugs	320.00	mugs for volunteers
3/18/16	Sherrie Le	Star Tribune	35.25	subscription
3/22/16	Sherrie Le	Surveymonkey	24.00	surveys
3/24/16	Sherrie Le	MAGC	195.00	Northern Lights entries
3/24/16	Sherrie Le	Volgistics Inc	31.00	volunteering software
3/24/16	Sherrie Le	Pho Saigon	60.66	meeting refreshments
3/30/16	Sherrie Le	Talentsmart	34.79	Emotional intelligence -hard cover book
3/31/16	Sherrie Le	Facebook	4.06	Robert St open house
3/25/16	Ben Boike	Lowes	519.30	carpet for front office
3/25/16	Ben Boike	Lowes	37.00	sales tax exempt

ansaction date		Vendor	Amount	
3/12/16	Marc Gade	Amazon Mktplace	28.89	camera tripod quick release
3/15/16	Marc Gade	Amazon Mktplace	11.79	remote shutter release
3/15/16	Marc Gade	Amazon Mktplace	31.99	apple dock connector
3/17/16	Marc Gade	Amazon Mktplace	55.98	lightning to vga adapter
3/20/16	Marc Gade	Amazon Mktplace	110.37	pocket flash memory card
3/31/16	Marc Gade	Amazon Mktplace	74.67	laptop 12v auto car charger
4/1/16	Marc Gade	Google	0.99	wav app for phone
4/1/16	Marc Gade	Amazon.com	33.39	high speed HDMI cable
4/5/16	Marc Gade	Amazon Mktplace	35.99	power adapter charger
4/10/16	Marc Gade	Amazon Mktplace	109.94	vga adapter/docking station
3/14/16	Matt Fulton	ACT*GTS MCMA	515.00	conference registration
4/24/16	Matt Fulton	Teresa's Mexican	25.96	mtg-Tom from ICMA - P
3/11/16	Mike Sanders	Swingsetmall.com	139.80	swing set belt
4/1/16	Mike Sanders	Paypal K2Motor	196.63	35 gallon red gas caddy
4/8/16	Mike Sanders	SJF Material Handling	709.60	racks
4/8/16	Mike Sanders	SJF Material Handling	50.56	sales tax exempt
4/11/16	Mike Sanders	1st Aid Supplies	56.18	1st aid supplies
3/17/16	Ross Beckwith	Cub Foods	19.84	CONDAC meeting
3/18/16	Ross Beckwith	Jimmy John's	342.62	CONDAC meeting
3/30/16	Ross Beckwith	U of M Contlearning	235.00	APWA MN Chapter Spring
4/1/16	Ross Beckwith	Caribou	12.84	Robert St meeting
4/1/16	Ross Beckwith	Cub Foods	22.47	Robert St meeting
4/8/16	Ross Beckwith	Cub Foods	17.98	Robert St meeting
4/8/16	Ross Beckwith	1st Aid Supplies	138.27	1st aid supplies
4/8/16	Ross Beckwith	Starbucks	16.02	Robert St meeting
3/11/16	Joan Carlson	Lucky's 13	56.07	mtg w/city mgr & northland securities
4/4/16	Joan Carlson	MNGFOA	15.00	conference registration
3/17/16	James Hartshorn	EB Summer Conference	130.00	conference registration
3/17/16	James Hartshorn	The lodge at Sugar lk	129.00	deposit on hotel
3/24/16	James Hartshorn	Applebees	19.69	mtg with counterpart IGH
3/29/16	James Hartshorn	Panera	27.46	refreshments for training
3/30/16	James Hartshorn	Panera	21.68	refreshments for training
4/1/16	James Hartshorn	Beirut Deli	13.78	mtg with chamber president
4/7/16	James Hartshorn	Panera	2.24	staff meeting
4/11/16	James Hartshorn	Panera	5.91	dev meeting
4/12/16	James Hartshorn	Int'l Code Council	80.00	renewal subscription
			12,336.94	

4/4/16 DEPOSIT ON CREDIT CARD (5,000.00)

7,336.94

TO: Mayor and City Council

THROUGH: Matt Fulton, City Manager

FROM: Joan Carlson, Finance Director

DATE: May 23, 2016

SUBJECT: Approve Transfer of Funds

City of West St. Paul

BACKGROUND INFORMATION:

At fiscal year-end all city funds should have a positive cash balance. In reviewing the balances at 12/31/15 it was noted that two funds had a negative cash balance. Transfers are needed as outlined below:

From	To	Amount	Purpose
General Fund	Golf Course Fund	18,006	2015 Cash Shortage
General Fund	Swimming Pool Fund	32,400	2015 Cash Shortage

The original Robert Street Improvement budget included transfers from the Sanitary Sewer and Stormsewer funds as funding sources. At the end of 2015 the project was approximately 50% complete therefore; staff is proposing to transfer 50% of those budgeted amounts. Transfers are requested as outlined below:

From	To	Amount	Purpose
Sanitary Sewer Fund	Street Improvement Fund	286,000	2015 Expenses
Stormsewer Fund	Street Improvement Fund	500,000	2015 Expenses

FISCAL IMPACT:

No net impact – cash balances of individual funds will be affected as noted.

		Amount
Fund:	**various**	
Department:	**various**	
Account:	**various**	**n/a**

STAFF RECOMMENDATION:

Approve transfer of funds as outlined above.

City of West St. Paul

TO: Mayor and City Council

THROUGH: Matt Fulton, City Manager

FROM: Joan Carlson, Finance Director

DATE: May 23, 2016

SUBJECT: April 2016 Investment Report

BACKGROUND INFORMATION:

Attached is the Investment Report for April 2016.

FISCAL IMPACT:

There is no fiscal impact.

		Amount
Fund:		
Department:		
Account:		

STAFF RECOMMENDATION:

Approve the April 2016 Investment Report.

UBS

Prepared for City of West Saint Paul
RP 34592 • Custody Acct • Business Service Account
Risk profile: Conservative
Return Objective: Current Income

Portfolio holdings

as of May 12, 2016

Summary of Portfolio Holdings

	Cost basis ($)	Value on 05/12/2016 ($)	Unrealized gain/loss ($)	Unrealized gain/loss (%)	Est. annual income ($)	Current yield (%)	% of portfolio
A Cash	**363,654.82**	**363,654.82**	**0.00**	**0.00%**	**1,381.89**	**0.38%**	**4.11%**
Cash	363,654.82	363,654.82	0.00	0.00%	1,381.89	0.38%	4.11%
B Fixed Income	**8,160,433.75**	**8,490,088.27**	**128,036.19**	**1.57%**	**148,920.00**	**1.75%**	**95.89%**
US	7,675,433.75	7,997,213.14	120,161.06	1.57%	140,652.50	1.76%	90.33%
International	485,000.00	492,875.13	7,875.13	1.62%	8,267.50	1.68%	5.56%
C Equity	**0.00**	**0.00**	**0.00**	**0.00%**	**0.00**	**0.00%**	**0.00%**
D Commodities	**0.00**	**0.00**	**0.00**	**0.00%**	**0.00**	**0.00%**	**0.00%**
E Non-Traditional	**0.00**	**0.00**	**0.00**	**0.00%**	**0.00**	**0.00%**	**0.00%**
F Other	**0.00**	**0.00**	**0.00**	**0.00%**	**0.00**	**0.00%**	**0.00%**
Total Portfolio	**$8,524,088.57**	**$8,853,743.09**	**$128,036.19**	**1.50%**	**$150,301.89**	**1.70%**	**100%**

Balanced mutual funds are allocated in the 'Other' category

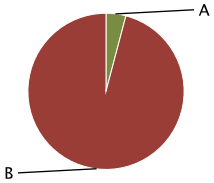

Details of portfolio holdings

	Cost basis ($)	Market value ($)	Unrealized gain/loss ($)	Unrealized gain/loss (%)	Est. annual income ($)	Current yield (%)	% of asset class	% of portfolio
Total Portfolio	**$8,524,088.57**	**$8,853,743.09**	**$128,036.19**	**1.50%**	**$150,301.89**	**1.70%**	**100%**	**100%**

Cash	Quantity	Purchase price ($) / Avg Price	Price on 05/12/2016 ($)	Cost basis ($)	Market value ($)	Unrealized gain/loss ($)	Unrealized gain/loss (%)	Est. annual income ($)	Current yield (%)	% of Cash	% of portfolio
Cash											
UBS SELECT PRIME INSTITUTIONAL FUND Client investment: $0.00 Reinvested dividends: $363,654.82 Investment return: $363,654.82 (0%)	363,654.82	1.00	1.00	363,654.82	363,654.82	0.00	0.00%	1,381.89	0.38%	100.00%	4.11%
Total Cash				**$363,654.82**	**$363,654.82**	**$0.00**	**0.00%**	**$1,381.89**	**0.38%**	**100.00%**	**4.11%**
Total Cash				**$363,654.82**	**$363,654.82**	**$0.00**	**0.00%**	**$1,381.89**	**0.38%**	**100.00%**	**4.11%**

Fixed Income	Quantity	Purchase price ($) / Avg Price	Price on 05/12/2016 ($)	Cost basis ($)	Market value ($)	Unrealized gain/loss ($)	Unrealized gain/loss (%)	Est. annual income ($)	Current yield (%)	% of Fixed Income	% of portfolio
US											
ALLY BK UT US RT 00.9000% MAT 08/22/16 FIXED RATE CD	240,000.00	100.00	100.12	240,000.00	240,760.14	760.14	0.32%	2,160.00	0.90%	2.84%	2.72%
AMERICAN EXPRESS C NY US RT 02.1000% MAT 10/17/18 FIXED RATE CD	240,000.00	100.00	102.11	240,000.00	245,418.81	5,418.81	2.26%	5,040.00	2.06%	2.89%	2.77%
AMERICAN EXPRESS F UT US RT 02.0000% MAT 07/24/19 FIXED RATE CD	240,000.00	100.00	102.37	240,000.00	247,121.42	7,121.42	2.97%	4,800.00	1.95%	2.91%	2.79%
BANK OF HAMPTON RO VA US RT 01.0000% MAT 09/27/17 FIXED RATE CD	240,000.00	100.00	100.18	240,000.00	240,724.87	724.87	0.30%	2,400.00	1.00%	2.84%	2.72%
BANKUNITED FSB FL US RT 01.1000% MAT 02/20/18 FIXED RATE CD	200,000.00	0.00	100.55	0.00	201,618.33	0.00	0.00%	2,200.00	1.09%	2.37%	2.28%
BARCLAYS BK DE US RT 02.1000% MAT 07/23/19 FIXED RATE CD	245,000.00	100.00	102.33	245,000.00	252,263.95	7,263.95	2.96%	5,145.00	2.05%	2.97%	2.85%
BK OF NORTH CAROLI ME US RT 01.0000% MAT 01/30/17 FIXED RATE CD	200,000.00	100.00	100.30	200,000.00	200,661.75	661.75	0.33%	2,000.00	1.00%	2.36%	2.27%

Portfolio holdings - as of May 12, 2016 (continued)

Fixed Income	Quantity	Purchase price ($) / Avg Price	Price on 05/12/2016 ($)	Cost basis ($)	Market value ($)	Unrealized gain/loss ($)	Unrealized gain/loss (%)	Est. annual income ($)	Current yield (%)	% of Fixed Income	% of portfolio
US											
BMW BANK NORTH AME UT US RT 02.1500% MAT 12/10/19 FIXED RATE CD	240,000.00	100.00	103.11	240,000.00	249,638.70	9,638.70	4.02%	5,160.00	2.09%	2.94%	2.82%
CAPITAL ONE BANK NA RT 02.3000% MAT 07/29/20 FIXED RATE CD	245,000.00	100.00	103.23	245,000.00	254,519.09	9,519.09	3.89%	5,635.00	2.23%	3.00%	2.87%
CAPITAL ONE BK VA US RT 02.1000% MAT 10/01/19 FIXED RATE CD	245,000.00	100.00	102.34	245,000.00	251,313.38	6,313.38	2.58%	5,145.00	2.05%	2.96%	2.84%
CIT BK SALT LAKE C UT US RT 02.1000% MAT 11/13/19 FIXED RATE CD	240,000.00	100.00	102.72	240,000.00	249,027.29	9,027.29	3.76%	5,040.00	2.04%	2.93%	2.81%
COMENITY BANK DE US RT 01.3500% MAT 12/12/17 FIXED RATE JUMBO CD	200,000.00	100.00	100.15	200,000.00	200,358.58	358.58	0.18%	2,700.00	1.35%	2.36%	2.26%
COMPASS BANK AL US RT 01.3000% MAT 12/11/17 FIXED RATE CD	245,000.00	100.00	100.41	245,000.00	247,361.93	2,361.93	0.96%	3,185.00	1.29%	2.91%	2.79%
DISCOVER BANK DE US RT 02.5500% MAT 08/27/21 FIXED RATE CD	240,000.00	100.00	104.82	240,000.00	252,830.33	12,830.33	5.35%	6,120.00	2.43%	2.98%	2.86%
FFCB BOND 01.900 % DUE 121721 DTD 121712 FC 06172013	500,000.00	100.00	99.94	500,000.00	503,521.39	3,521.39	0.70%	9,500.00	1.90%	5.93%	5.69%
FIRST BK HIGHLAND IL US RT 01.9500% MAT 07/24/19 FIXED RATE CD	240,000.00	100.00	100.29	240,000.00	240,914.79	914.79	0.38%	4,680.00	1.94%	2.84%	2.72%
FNMA NTS 01.000 % DUE 122617 DTD 122612 FC 06262013	250,000.00	100.00	100.09	250,000.00	251,171.94	1,171.94	0.47%	2,500.00	1.00%	2.96%	2.84%
GE CAPITAL BANK UT US RT 01.3500% MAT 08/29/17 FIXED RATE CD	240,000.00	100.00	100.46	240,000.00	241,749.60	1,749.60	0.73%	3,240.00	1.34%	2.85%	2.73%
GOLDMAN SACHS BANK NY US RT 02.0500% MAT 07/23/19 FIXED RATE CD	200,000.00	100.00	102.21	200,000.00	205,651.62	5,651.62	2.83%	4,100.00	2.01%	2.42%	2.32%
GOLDMAN SACHS BANK UT US RT 01.8500% MAT 08/31/16 FIXED RATE CD	40,000.00	100.00	100.40	40,000.00	40,308.80	308.80	0.77%	740.00	1.84%	0.47%	0.46%
HSBC BANK , NA DE US RT 01.2500% MAT 03/30/20 STEP RATE CD	240,000.00	100.00	100.08	240,000.00	240,196.80	196.80	0.08%	3,000.00	1.25%	2.83%	2.71%
JPMORGAN CHASE & C DE US RT 01.2500% MAT 11/30/18 FIXED RATE CD	200,000.00	100.00	100.04	200,000.00	200,572.00	572.00	0.29%	2,500.00	1.25%	2.36%	2.27%

Portfolio holdings - as of May 12, 2016 (continued)

Fixed Income	Quantity	Purchase price ($) / Avg Price	Price on 05/12/2016 ($)	Cost basis ($)	Market value ($)	Unrealized gain/loss ($)	Unrealized gain/loss (%)	Est. annual income ($)	Current yield (%)	% of Fixed Income	% of portfolio
US											
NEW YORK CITY TRANSITION TAX C-3 RV BE/R/ 1.280 110118 DTD 120412	500,000.00	100.00	100.21	500,000.00	501,240.56	1,240.56	0.25%	6,400.00	1.28%	5.90%	5.66%
NEW YORK CITY TRANSITION TAX C-3 RV BE/R/ 2.400 110123 DTD 120412	500,000.00	97.63	98.96	488,145.00	495,171.67	7,026.67	1.44%	12,000.00	2.43%	5.83%	5.59%
SALLIE MAE BK UT US RT 01.5000% MAT 10/10/17 FIXED RATE CD	240,000.00	100.00	100.84	240,000.00	242,334.02	2,334.02	0.97%	3,600.00	1.49%	2.85%	2.74%
SUN NATL BK NJ US RT 01.0000% MAT 10/03/17 FIXED RATE CD	240,000.00	100.00	100.18	240,000.00	240,487.00	487.00	0.20%	2,400.00	1.00%	2.83%	2.72%
SYNCHRONY BK UT US RT 02.6500% MAT 08/23/21 FIXED RATE CD	240,000.00	100.00	104.81	240,000.00	252,930.77	12,930.77	5.39%	6,360.00	2.53%	2.98%	2.86%
THIEF RIVER FALLS MN TAX SR B BE/R/ 3.000 020125 DTD 060112	375,000.00	101.68	101.46	381,288.75	383,620.00	2,331.25	0.61%	11,250.00	2.96%	4.52%	4.33%
THIRD FED S&L ASSN OH US RT 02.0000% MAT 11/25/19 FIXED RATE CD	247,000.00	100.00	102.69	247,000.00	255,945.12	8,945.12	3.62%	4,940.00	1.95%	3.01%	2.89%
TWO RIVERS ST BK NE US RT 01.2500% MAT 07/18/19 FIXED RATE CD	169,000.00	100.00	100.01	169,000.00	169,160.87	160.87	0.10%	2,112.50	1.25%	1.99%	1.91%
WORLD'S FOREMOST B NE US RT 02.3000% MAT 08/06/20 FIXED RATE JUMBO CD	200,000.00	100.00	99.27	200,000.00	198,617.62	-1,382.38	-0.69%	4,600.00	2.32%	2.34%	2.24%
Total US				**$7,675,433.75**	**$7,997,213.14**	**$120,161.06**	**1.57%**	**$140,652.50**	**1.76%**	**94.19%**	**90.33%**
International											
ORIENTAL BANK PR RT 01.2500% MAT 08/31/17 FIXED RATE CD	240,000.00	100.00	100.45	240,000.00	241,171.43	1,171.43	0.49%	3,000.00	1.24%	2.84%	2.72%
STATE BK OF INDIA NY US RT 02.1500% MAT 09/11/19 FIXED RATE CD	245,000.00	100.00	102.37	245,000.00	251,703.70	6,703.70	2.74%	5,267.50	2.10%	2.96%	2.84%
Total International				**$485,000.00**	**$492,875.13**	**$7,875.13**	**1.62%**	**$8,267.50**	**1.68%**	**5.81%**	**5.56%**
Total Fixed Income				**$8,160,433.75**	**$8,490,088.27**	**$128,036.19**	**1.57%**	**$148,920.00**	**1.75%**	**100.00%**	**95.89%**

Portfolio holdings - as of May 12, 2016 (continued)

	Cost basis ($)	Market value ($)	Unrealized gain/loss ($)	Unrealized gain/loss (%)	Est. annual income ($)	Current yield (%)	% of asset class	% of portfolio
Total Portfolio	**$8,524,088.57**	**$8,853,743.09**	**$128,036.19**	**1.50%**	**$150,301.89**	**1.70%**	**100%**	**100%**

Total accrued interest (included in market values): $30,748.25

UBS

Disclosures applicable to accounts at UBS Financial Services Inc.

This section contains important disclosures regarding the information and valuations presented here. This report presents information since December 31, 2002. This report does not include complete account activity or performance of your accounts before this date. All information presented is subject to change at any time and is provided only as of the date indicated. The information in this report is for informational purposes only and should not be relied upon as the basis of an investment or liquidation decision. UBS FS accounts statements and official tax documents are the only official record of your accounts and are not replaced, amended or superseded by any of the information presented in these reports.

UBS FS offers a number of investment advisory programs to clients, acting in our capacity as an investment adviser, including fee-based financial planning, discretionary account management, non-discretionary investment advisory programs, and advice on the selection of investment managers and mutual funds offered through our investment advisory programs. When we act as your investment adviser, we will have a written agreement with you expressly acknowledging our investment advisory relationship with you and describing our obligations to you. At the beginning of our advisory relationship, we will give you our Form ADV brochure(s) for the program(s) you selected that provides detailed information about, among other things, the advisory services we provide, our fees, our personnel, our other business activities and financial industry affiliations and conflicts between our interests and your interests.

Please review the report content carefully and contact your Financial Advisor with any questions.

The account listing may or may not include all of your accounts with UBS FS. The accounts included in this report are listed under the "Accounts included in this review" shown on the first page or listed at the top of each page.

Portfolio: For purposes of this report "portfolio" is defined as all of the accounts presented on the cover page or the header of this report and does not necessarily include all of the client's accounts held at UBS FS or elsewhere.

Percentage: Portfolio (in the "% Portfolio" column) includes all holdings held in the account(s) selected when this report was generated.Broad asset class (in the "% broad asset class" column) includes all holdings held in that broad asset class in the account(s) selected when this report was generated.

Tax lots: This report displays security tax lots as either one line item (i.e., lumped tax lots) or as separate tax lot level information. If you choose to display security tax lots as one line item, the total cost equals the total value of all tax lots. The unit cost is an average of the total cost divided by the total number of shares. If the shares were purchased in different lots, the unit price listed does not represent the actual cost paid for each lot. The unrealized gain/loss value is calculated by combining the total value of all tax lots plus or minus the total market value of the security.

If you choose to display tax lot level information as separate line items on the Portfolio Holdings report, the tax lot information may include information from sources other than UBS FS. The Firm does not independently verify or guarantee the accuracy or validity of any information provided by sources other than UBS FS. As a result this information may not be accurate and is provided for informational purposes only. Clients should not rely on this information in making purchase or sell decisions, for tax purposes or otherwise. See your monthly statement for additional information.

Pricing: All securities are priced using the closing price reported on the last business day preceding the date of this report. Every reasonable attempt has been made to accurately price securities; however, we make no warranty with respect to any security's price. Please refer to the back of the first page of your UBS FS. accounts statement for important information regarding the pricing used for certain types of securities, the sources of pricing data and other qualifications concerning the pricing of securities. To determine the value of securities in your account, we generally rely on third party quotation services. If a price is unavailable or believed to be unreliable, we may determine the price in good faith and may use other sources such as the last recorded transaction. When securities are held at another custodian or if you hold illiquid or restricted securities for which there is no published price, we will generally rely on the value provided by the custodian or issuer of that security.

Cash: Cash on deposit at UBS Bank USA is protected by the Federal Deposit Insurance Corporation (FDIC) up to $250,000 in principal and accrued interest per depositor for each ownership type. Deposits made in an individual's own name, joint name, or individual retirement account are each held in a separate type of ownership. Such deposits are not guaranteed by UBS FS. More information is available upon request.

Margin: The quantity value may indicate that all or part of this position is held on margin or held in the short account. When an account holds a debit balance, this debit balance is incorporated into the account's total market value and deducted from the total value. When calculating the percent of portfolio on each security, the percentage will be impacted by the total market value of the account. Therefore, if the account's market value is reduced by a debit value of a holding the percent of portfolio will be greater and if the account's market value is increased by a holding then the percent of portfolio will be less.

Mutual Fund Asset Allocation: If the option to unbundle balanced mutual funds is selected and if a fund's holdings data is available, mutual funds will be classified by the asset class, subclass, and style breakdown of their underlying holdings. Where a mutual fund or ETF contains equity holdings from multiple equity sectors, this report will proportionately allocate the underlying holdings of the fund to those sectors measured as a percentage of the total fund's asset value as of the date shown.

This information is supplied by Morningstar, Inc. on a monthly basis to UBS FS based on data supplied by the fund which may not be current. Mutual funds change their portfolio holdings on a regular (often daily) basis. Accordingly, any analysis that includes mutual funds may not accurately reflect the current composition of these funds. If a fund's underlying holding data is not available, it will be classified based on its corresponding overall Morningstar classification. All data is as of the date indicated in the report.

Equity Style: The Growth, Value and Core labels are determined by Standard and Poor's using a price-to-book ratio methodology. The Growth, Value and Core labels are based on how a company's price-to-book ratio compares to the median price-to-book ratio for its industry based on the company's assigned Industry Sector. If the company's ratio is greater than or equal to the industry median, it is classified as a growth stock. If the company's ratio is less than the industry median, it is classified as a value stock. If a security includes both growth and value attributes, it is classified as a core stock. If price-to-book is not available or the industry's median is not available, this item will be Unclassified.

Equity Capitalization: Market Capitalization is defined as the number of shares outstanding times the market value. Equity securities are classified as Large Cap if they have a capitalization of 8 billion or above. Securities with capitalization between 1.8 and 7.9 billion are classified as Mid Cap. Securities with capitalization below 1.79 billion are classified as Small Cap. Unclassified securities are those for which no capitalization is available or applicable.

Equity Sectors: The Equity sector analysis may include a variety of accounts, each with different investment and risk parameters. As a result, the overweighting or underweighting in a particular sector or asset class should not be viewed as an isolated factor in making investment/liquidation decisions; but should be assessed on an account by account basis to determine the overall impact on the account's portfolio.

Classified Equity: Classified equities are defined as those equities for which the firm can confirm the specific industry and sector of the underlying equity instrument.

Estimated Annual Income: The Estimated Annual Income is the annualized year to date per share dividends paid and multiplied by the quantity of shares held in the selected account(s).

Current Yield: Current yield is defined as the estimated annual income divided by the total market value.

Credit/Event Risk: Investments are subject to event risk and changes in credit quality of the issuer. Issuers can experience economic situations that may have adverse effects on the market value of their securities.

Interest Rate Risk: Bonds are subject to market value fluctuations as interest rates rise and fall. If sold prior to maturity, the price received for an issue may be less than the original purchase price.

Reinvestment Risk: Since most corporate issues pay interest semiannually, the coupon payments over the life of the bond can have a major impact on the bond's total return.

Accrued Interest: Interest that has accumulated between the most recent payment and the report date may be reflected in market values for interest bearing securities.

Gain/Loss: The gain/loss information may include calculations based upon non-UBS FS cost basis information. The Firm does not independently verify or guarantee the accuracy or validity of any information provided by sources other than UBS FS. In addition, if this report contains positions with unavailable cost basis, the gain/(loss) for these positions are excluded in the calculation for the Gain/(Loss). As a result these figures may not be accurate and are provided for informational purposes only. Clients should not rely on this information in making purchase or sell decisions, for tax purposes or otherwise. Rely only on year-end tax forms when preparing your tax return. See your monthly statement for additional information.

Account changes: At UBS, we are committed to helping you work toward your financial goals. So that we may continue providing you with financial advice that is consistent with your investment objectives, please consider the following two questions:
1) Have there been any changes to your financial situation or investment objectives?
2) Would you like to implement or modify any restrictions regarding the management of your account?
If the answer to either question is "yes," it is important that you contact your Financial Advisor as soon as possible to discuss these changes. For MAC advisory accounts, please contact your investment manager directly if you would like to impose or change any investment restrictions on your account.

ADV disclosure: A complimentary copy of our current Form ADV Disclosure Brochure that describes the advisory program and related fees is available through your Financial Advisor.Please contact your Financial Advisor if you have any questions.

Important information for former Piper Jaffray and McDonald Investments clients: As an accommodation to former Piper Jaffray and McDonald Investments clients, these reports include performance history for their Piper Jaffray accounts prior to August 12, 2006 and McDonald Investments accounts prior to February 9, 2007, the date the respective accounts were converted to UBS FS. UBS FS has not independently verified this information nor do we make any representations or warranties as to the accuracy or completeness of that information and will not be liable to you if any such information is unavailable, delayed or inaccurate.

For insurance, annuities, and 529 Plans, UBS FS relies on information obtained from third party services it believes to be reliable. UBS FS does not independently verify or guarantee the accuracy or validity of any information provided by third parties. Information for insurance, annuities, and 529 Plans that has been provided by a third party service may not reflect the quantity and market value as of the previous business day. When available, an "as of" date is included in the description.

Investors outside the U.S. are subject to securities and tax regulations within their applicable jurisdiction that are not addressed in this report. Nothing in this report shall be construed to be a solicitation to buy or offer to sell any security, product or service to any non-U.S. investor, nor shall any such security, product or service be solicited, offered or sold in any jurisdiction where such activity would be contrary to the securities laws or other local laws and regulations or would subject UBS to any registration requirement within such jurisdiction.

UBS FS All Rights Reserved. Member SIPC.

TO: Mayor and City Council

THROUGH: Matt Fulton, City Manager

FROM: Joan Carlson, Finance Director

DATE: May 23, 2016

SUBJECT: April 2016 General Fund Budget Report

City of West St. Paul

BACKGROUND INFORMATION:

Attached is the April 2016 General Fund Budget to Actual Report for Council review. The revenues are reported by major type and the expenditures are reported by department.

The budget target percentage for April is 33%. Actual revenues total 4% and expenditures total 29%. Total revenue will remain well below budget until July when the first half tax settlement is received.

All departments are near or below 33% with the following exceptions:

- Mayor/Council – 55% due to billing for 2016 audit services and Winter Fun Fest expenditures (these expenses were offset by donations).
- Civil Defense – 43% due to annual membership fee paid in February.
- Human Resources – 39% due to annual sick leave conversion payout.

FISCAL IMPACT: None

		Amount
Fund:		
Department:		
Account:		

STAFF RECOMMENDATION:

Approve the April 2016 General Fund Budget Report.

City of West St Paul
General Fund Budget to Actual Report
April 2016

Account Description	Adopted Budget	Current Transactions	YTD Transactions	Remaining Budget	% of Budget Rec'd/Used
Fund 101 - General Fund					
REVENUE					
Taxes	10,053,785	768	768	10,053,017	0%
Licenses and Permits	519,500	21,941	86,631	432,869	17%
Intergovernmental Revenues	484,500	4,090	112,655	371,845	23%
Charges for Services	639,205	52,228	211,500	427,705	33%
Fines & Forfeits	125,000	15,409	50,403	74,597	40%
Miscellaneous	231,908	6,041	32,134	199,774	14%
Other Financing Sources	688,000	-	-	688,000	0%
REVENUE TOTALS	12,741,898	100,477	494,091	12,247,807	4%
EXPENSE					
Mayor and Council	120,652	24,403	66,073	54,579	55%
Charter Commission	1,500	119	195	1,305	13%
City Manager / City Clerk	778,375	83,291	262,416	515,959	34%
Elections	28,575	18	65	28,510	0%
Finance	378,370	40,039	129,287	249,083	34%
Legal	360,000	43,984	122,399	237,601	34%
Planning & Comm Devlep	317,275	24,310	69,146	248,129	22%
Recycling Dept	23,250	1,290	1,432	21,818	6%
Information Technology	437,225	29,617	151,655	285,570	35%
City Hall Building	205,610	15,592	58,958	146,652	29%
PW Facility	63,000	3,770	15,906	47,094	25%
Police	4,319,675	436,125	1,395,129	2,924,546	32%
Communications Center	638,065	52,150	209,033	429,032	33%
Fire	2,125,394	177,116	354,232	1,771,162	17%
Building Inspections	415,635	37,533	123,853	291,782	30%
Civil Defense	15,295	31	6,553	8,742	43%
Traffic Signs	23,900	3,707	4,636	19,264	19%
Animal Control	5,150	-	-	5,150	0%
Engineering	204,004	19,487	63,811	140,193	31%
Streets	1,201,698	105,277	413,450	788,248	34%
Street Lighting	132,025	19,483	39,812	92,213	30%
Human Resources	88,775	5,041	34,767	54,008	39%
Parks and Recreation	823,450	62,320	225,653	597,797	27%
Transfers Out	35,000	-	-	35,000	0%
EXPENSE TOTALS	12,741,898	1,184,701	3,748,459	8,993,439	29%
General Fund Totals					
REVENUE TOTALS	12,741,898	100,477	494,091	12,247,807	4%
EXPENSE TOTALS	12,741,898	1,184,701	3,748,459	8,993,439	29%
General Fund Net	-	(1,084,224)	(3,254,368)	3,254,368	

TO: Mayor and City Council
THROUGH: Matt Fulton, City Manager
FROM: Police Department
DATE: May 23, 2016
SUBJECT: City Business and Liquor Licenses

City of West St. Paul

BACKGROUND INFORMATION:

Licensing Staff have reviewed the following business and liquor license applications and all requirements have been met.

All license holders must comply with all conditions placed on the property pursuant to any zoning approval.

2016 Business Licenses – No Background

2016 Business Licenses – Background Required

Application for Temporary Liquor On-Sale Liquor License for St. George Antiochian Orthodox Christian Church, 1250 Oakdale Avenue for an event to be held July 15-17, 2016.

FISCAL IMPACT:

Action	Fund	Department	Account	Amount
Liquor License Fee	101	30000	32110	25.00
Background Fee	101	30000	34208	100.00
			Total:	$125.00

STAFF RECOMMENDATION:

In processing this application staff found no notable concerns or issues. Staff does not foresee any special or reasonable conditions. Council needs to consider the application for approval.

TO: Mayor and City Council

THROUGH: Matt Fulton, City Manager

FROM: Community Development Department

DATE: May 23, 2016

SUBJECT: City Rental Licenses

City of West St. Paul

BACKGROUND INFORMATION:

2016 Rental Business Licenses – Background Required

According to the Rental Dwelling Ordinance, the city requires a background investigation for each applicant. In addition, the Police Department reviewed calls for service to the properties to help identify potential problem properties.

The Community Development Department reviewed the application, inspection report, rental density, and code compliance requirements.

The background investigation, inspection report, and code compliance review on the property listed below did not identify any incidents that would result in a denial of the rental license.

Applications/Rentals for approval:

1945-1955 Oakdale Avenue
173 Kathleen Drive
1530 Bellows Street
230 Marie Avenue West

FISCAL IMPACT:

Application Fees Received:		**Amount:**
Fund:	**101**	
Department:	**30000**	
Account:	**32170**	**$ 2,380**

STAFF RECOMMENDATION:

Staff recommends City Council approve the license applications.

TO: Mayor and City Council

THROUGH: Matt Fulton, City Manager

FROM: Joan Carlson, Finance Director

DATE: May 23, 2016

SUBJECT: Approve Interfund Loan

City of West St. Paul

BACKGROUND INFORMATION:

At fiscal year-end all city funds should have a positive cash balance. As of 12/31/2015 the Street Improvement Revolving Fund, which is used to account for the Robert Street Reconstruction Project, will have a negative balance of $5,671,792. Staff is therefore proposing an interfund loan from the General Fund to cover this cash shortfall. This will be a short term interfund loan which will be repaid in 2016 with federal grant money and either additional state funds or bond proceeds.

FISCAL IMPACT:

No net impact – cash balances of individual funds will be affected.

		Amount
Fund:	**various**	
Department:	**various**	
Account:	**various**	**n/a**

STAFF RECOMMENDATION:

Approve interfund loan as outlined above.

TO: Mayor and City Council

THROUGH: Matt Fulton, City Manager

Jim Hartshorn, Comm. Dev. Dir.

FROM: Ben Boike, Assistant Comm. Dev. Dir.

DATE: May 23, 2016

SUBJECT: Interim Use Permit – 1640 Robert St.

City of West St. Paul

BACKGROUND INFORMATION:

TNT Fireworks is requesting an Interim Use Permit to allow for the outdoor sale of fireworks in the Walmart parking lot at 1640 Robert St.

For more detailed information on the proposed Interim Use Permit please see the attached Planning Commission report.

Planning Commission
The Planning Commission met in regular session on May 17, 2016 and held a public hearing. The Commission voted 7-0 to recommend APPROVAL of the Interim Use Permit subject to the listed conditions below. No one from the public wished to speak on the item.

FISCAL IMPACT:

		Amount
Fund:		
Department:		
Account:		**N/A**

STAFF RECOMMENDATION:

Staff recommends that the City Council approve the Interim Use Permit subject to the following conditions:

1. The applicant shall meet the provisions as outlined in Section 153.172 of the Zoning Code.
2. The applicant shall obtain a City License to sell fireworks. In addition, the display/sales area shall be inspected by the Fire Marshal and Building Official and meet the National Fire Protection Association standards.
3. Trash receptacles shall be provided on-site and items sold in the sales area shall be secured on a nightly basis.
4. The Interim Use Permit shall be valid from June 21, 2016 through July 7, 2016. Sale hours shall be limited to 10 a.m. to 10 p.m.

CITY OF WEST ST. PAUL
DAKOTA COUNTY, MINNESOTA

RESOLUTION NO. 16-

A RESOLUTION APPROVING AN INTERIM USE PERMIT FOR OUTDOOR DISPLAY AND SALE OF FIREWORKS IN A B4 DISTRICT AT 1640 ROBERT STREET (WAL-MART)

WHEREAS, An Application for an Interim Use Permit has been submitted to the City for property legally described as:

LOT 1 BLOCK 1 EX PT TO CITY, K-MART NO 3445 ADDITION

WHEREAS, a public hearing concerning the Application for an Interim Use Permit was held before the West St. Paul Planning Commission on May 17, 2016; and

WHEREAS, the West St. Paul Planning Commission has recommended that the City Council of West St. Paul approve the Application for an Interim Use Permit;

NOW THEREFORE BE IT RESOLVED BY THE CITY COUNCIL OF WEST ST. PAUL that the Application for an Interim Use Permit to allow outdoor display and sale of Fireworks in a B4 District at 1640 Robert Street is hereby approved subject to the following conditions:

1. The applicant shall meet the provisions as outlined in Section 153.172 of the Zoning Code.
2. The applicant shall obtain a City License to sell fireworks. In addition, the display/sales area shall be inspected by the Fire Marshal and Building Official and meet the National Fire Protection Association standards.
3. Trash receptacles shall be provided on-site and items sold in the sales area shall be secured on a nightly basis.
4. The Interim Use Permit shall be valid from June 21, 2016 through July 7, 2016. Sale hours shall be limited to 10 a.m. to 10 p.m.

Passed by the City Council of the City of West St. Paul this 23rd day of May, 2016.

Ayes: Nays:

Attest:

_____ _____

David Meisinger, Mayor Chantal Doriott, City Clerk

TO: Planning Commission

FROM: Ben Boike, Assistant Comm. Dev. Dir.

DATE: May 17, 2016

SUBJECT: Interim Use Permit – 1640 Robert St.

City of West St. Paul

REQUEST

TNT Fireworks is requesting an Interim Use Permit to allow for the outdoor sale of fireworks in the Walmart parking lot at 1640 Robert St.

Attachments:
Application
Site Map

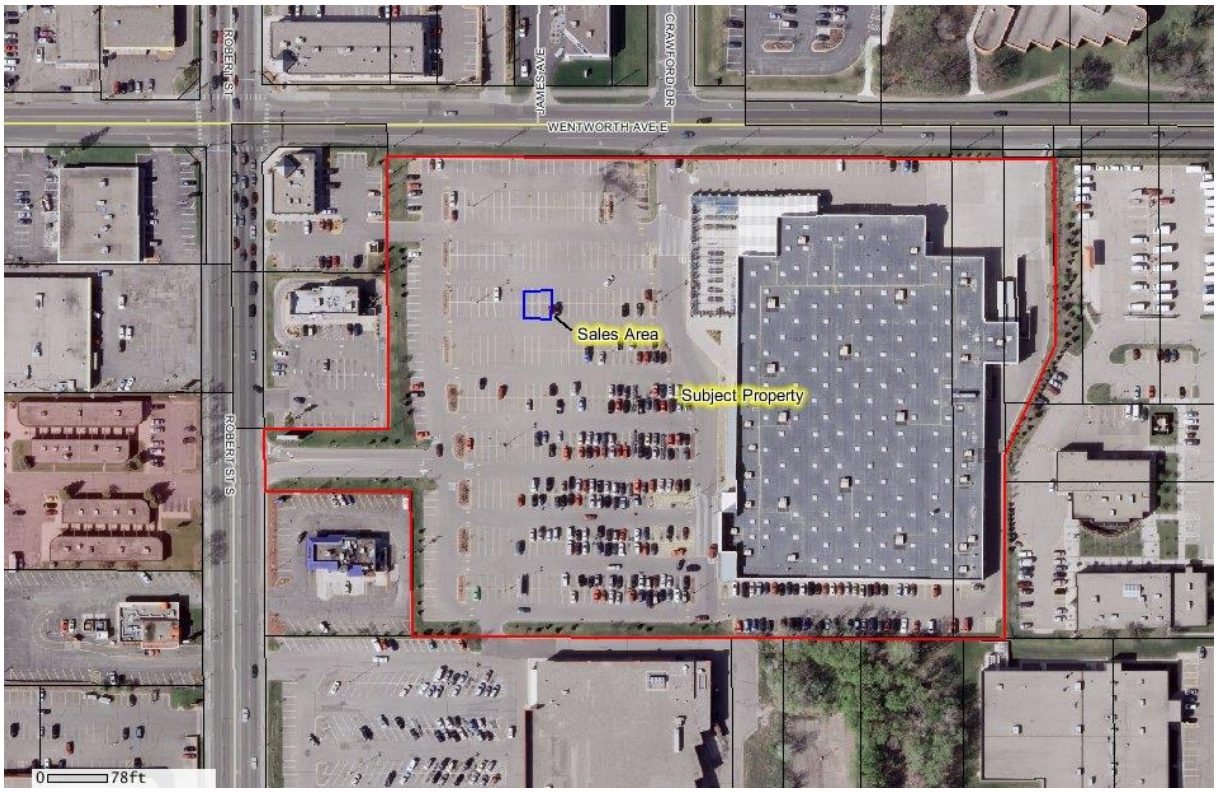

EXISTING LAND USES

The subject property consists of a retail building, Walmart. Adjacent properties to the west and south consist of commercial uses. Adjacent properties to the north consist of commercial uses and the County library. The adjacent property to the east consists of DARTS.

ZONING

The subject property and adjacent property to the south are zoned B-4, Shopping Center District. Adjacent properties to the west and north are zoned B-6, Town Center Mixed-use. The adjacent property to the east is zoned I-1, Light Industrial.

ANALYSIS

The B-4 Zoning District allows Interim Uses for the outdoor sale of fireworks if the following conditions are met:

> (a) The display/sales area meets National Fire Protection Association standards, as required by the Fire Marshal.
>
> (b) The sales area shall be Setback at least 300 feet from the Robert Street right-of-way and 150 feet back from any other street.
>
> (c) The sales area shall not reduce the required supply of off-street parking below the required number of spaces for the Principal Building and for the Interim Use.
>
> (d) Off-street parking required for the sales area shall be one space per 150 square feet of sales area.

The applicant is proposing to display and sell legal fireworks in a tent within the Walmart parking lot (see site aerial for location). The applicant applied for and received approval of an Interim Use Permit in 2012-2015. This year's request is similar to the last four years in terms of location, size of display area, etc.

The proposed tent is 20'x 40' (800 sq. ft.) which will take up roughly 12 parking stalls. Per Ordinance, an additional 6 parking stalls are required to support the sales area. The Walmart parking lot has an excess of 35 stalls above the minimum number of stalls required. Therefore, the loss of 12 stalls as a result of the tent and the need for 6 additional stalls to support the sales area is a non-issue. The applicant is requesting to operate from June 21st through July 7th, which includes setup and take down. Proposed sales hours are 10 a.m. to 10 p.m.

The proposed display/sales area meets the conditions as outlined above. Staff is recommending a condition of approval requiring the applicant to obtain a city license to sell fireworks, including an inspection of the tent by the Fire Marshal and Building Official. The proposed tent must meet National Fire Protection Association standards. In addition, Staff is recommending a condition requiring that all items displayed be secured on a nightly basis and that trash receptacles be provided.

STAFF RECOMMENDATION

Staff recommends APPROVAL of the INTERIM USE PERMIT to allow for the OUTDOOR DISPLAY/SALE of FIREWORKS subject to the following conditions:

1. The applicant shall meet the provisions as outlined in Section 23.5 of the Zoning Code.
2. The applicant shall obtain a City License to sell fireworks. In addition, the display/sales area shall be inspected by the Fire Marshal and Building Official and meet the National Fire Protection Association standards.
3. Trash receptacles shall be provided on-site and items sold in the sales area shall be secured on a nightly basis.
4. The Interim Use Permit shall be valid from June 21, 2016 through July 7, 2016. Sale hours shall be limited to 10 a.m. to 10 p.m.

CITY OF WEST ST. PAUL

1616 HUMBOLDT AVENUE, WEST ST. PAUL, MN 55118-3972

MUNICIPAL CENTER 651-552-4100 POLICE 651-552-4200
PARKS/RECREATION651-552-4150 FIRE 651-552-4176
FAX 651-552-4190 TDD 651-552-4222

INTERIM USE PERMIT APPLICATION

Filing Fee: $175.00

Escrow Amount: N/A

TOTAL FEES $175.00

(OFFICE USE ONLY)

DATE RECEIVED 4/22/16
RECEIPT #
60 DAY DATE 6/21/16

1. STREET ADDRESS OF PARCEL 1644 robert st. South, West saint paul, MN 55118

2. NAME OF APPLICANT TNT FIREWORKS Phone # 256-764-6131 EXT 2321

3. ADDRESS OF APPLICANT 4003 HELTON DRIVE Email DANIELV@TNTFIREWORKS.COM

FLORENCE, AL 35630

4. NAME OF OWNER WAL MART STORES INC. Phone # 479-273-4219

5. ADDRESS OF OWNER 2001 S.E. 10TH ST. Email

BENTONVILLE, AR 72716

6. LEGAL/PID #

7. PRESENT ZONING B4

8. PROPOSED USE OF PARCEL RETAIL SALE OF MN STATE APPROVED FIREWORKS

9. ZONING SECTION AUTHORIZING IUP

10. WHAT WILL BE THE EFFECT OF THE PROPOSED USE ON THE HEALTH, SAFETY, & WELFARE OF THE OCCUPANTS IN THE SURROUNDING PARCELS? THIS WILL HAVE NO ADVERSE EFFECT

11. WHAT WILL BE THE EFFECT ON EXISTING AND ANTICIPATED TRAFFIC CONDITIONS, INCLUDING PARKING FACILITIES ON ADJACENT STREETS? THIS WILL NOT INCREASE TRAFFIC. THE SALES AREA WILL TAKE UP NO MORE THAN 6 OF THE 35 PARKING SPACES THEY HAVE IN EXCESS

12. WHAT WILL BE THE EFFECT OF THE PROPOSED USE ON THE COMPREHENSIVE PLAN? THIS WILL HAVE NO ADVERSE EFFECT.

PROMOTING AND PRESERVING A COMMUNITY OF EXCELLENCE
BY THE ETHICAL, RESPONSIVE, EFFICIENT AND INNOVATIVE PROVISION OF SERVICES
EOE/AAE

EXHIBITS REQUIRED

A. An electronic copy as well as four (4) 22x34 and twenty (20) 11x17 paper copies, of a map or plat showing the property on which the Interim Use Permit is requested, and all parcel within 150 feet of the boundaries of the subject parcel.

B. An electronic copy as well as four (4) 22x34 and twenty (20) 11x17 paper copies in sets and folded plans, showing application information as follows:
   a. Proposed and existing topography, and drainage.
   b. A complete plan prepared and signed by a registered Civil Engineer, Architect, and/or Landscape Architect showing:
      i. The parking layout, access provisions, structure locations, landscaping, drainage, trees and shrubbery including types and locations, and sizes.
      ii. Any fences, walls, or other screening, including height and type of material.
      iii. All lighting provisions, including type, location, and lumens affecting the surrounding parcels and streets.
      iv. Curb type and location on site.
      v. Proposed plans for sidewalk to service, parking, recreation and service areas within the site.

ACKNOWLEDGE AND SIGNATURE

The undersigned hereby represents upon all penalties of law, for the purpose of inducing the City of West St Paul to take action herein requested, that all statements herein are true and that all work herein mentioned will be done in accordance with the Ordinances and all Codes of the City of West St Paul and the State of Minnesota.

Signature of Owner (Required)	Phone Number
Virginia Daniel	
Signature of Applicant (If different)	Phone Number

NOTE: All Materials relevant to this Application must be filed on or before the dates listed on Operating Procedures for Applicants page. The Planning Commission holds its regular meeting at 7:00pm on the third Tuesday of each month.

LAPSE OF INTERIM USE PERMIT:
An approved Interim Use Permit shall lapse and become null and void three months following the date on which the Interim Use Permit was approved if is not in use or otherwise approved for a later time.

FEES
1. The fees to be paid by each applicant for each zoning request shall be as prescribed by the City Council. Fees shall be payable at the time applications are filed with the Zoning Administrator and are not refundable unless the application is withdrawn prior to being sent for legal publication and notice. There shall be no fee in the case of applications filed in the public interest by the City Council or by the Planning Commission. Fees shall include application fee, filing fees, consultant, legal, planning, and engineering fees.
2. Applicants shall deposit with the City, together with the application filing fees, the sums required by Council resolution toward prepayment of the Consultants and Attorney's expenses and all costs to be billed and charged to the City. The prepayment amounts shall be a credit toward all reasonable fees and expenses charged by the Consultants to the City in the investigation report and recommendation to the City Council concerning the application. All reasonable expenses and fees in excess of the deposit, shall be paid by the applicant to the City within 30 days of final action on the matter by the City. If not paid within 30 days, the account shall be deemed delinquent. If the fees and expenses incurred by the City from the Consultants are less than the amount of deposit, such excess shall be returned to the applicant upon final action by the City in said manner.

To Whom It May Concern:

We plan to sell Minnesota-approved Consumer Fireworks during the July 4th holiday season in the Walmart parking lot at 9320 Cedar Street.

We are allowed 12 days of operation at the said location, which we plan to operate from June 21 to July 7. Our normal business hours are from 10:00 A.M. to 10:00 P.M.

We can concur with all the following criteria:

- Not be detrimental to property or improvements in the surrounding area or to the public health, safety, or general welfare.
- Be compatible with the principal uses taking place on the site.
- Not have substantial adverse effects or noise impacts on nearby residential neighborhoods.
- Not include permanent alterations to the site.
- Not maintain temporary signs associated with the use or structure after the activity ends.
- Not violate the applicable conditions of approval that apply to a site or use on the site.
- Not interfere with the normal operations of any permanent use located on the property; and
- Contain sufficient land area to allow the temporary use, structure, or special event to occur, as well as adequate land to accommodate the parking and traffic movement associated with the temporary use, without disturbing environmentally sensitive lands.

Thanks,

Chris Ulmer

TNT Fireworks - Minnesota - Area Manager

ulmerc@tntfireworks.com

Cell: 701.400.7661
Fax: 866.807.1722

Walmart

Tenant Access Letter

TNT Fireworks to scope parking lot space and sell fireworks

To: American Promotional Events, Inc. D.B.A. TNT Fireworks

From: Walmart Services

Date: 12/21/15

RE: TNT Fireworks to scope parking lot space and sell fireworks

Dear Valued Tenant,

Thank you for your continued support and collaboration. Upon arrival at the store where the event/promotion will occur, this access Letter ("Letter") should be provided to store management. This letter shall serve as proof that you are authorized to enter the store and complete the parking lot scoping and execution of a temporary firework stand as a promotion/event for the time period specified below. You are also authorized and required to obtain the proper permitting as required by the local city, county, and/or state. Only your employees (collectively "Representatives") may perform the promotion on your behalf. Your Representatives must produce credentials to store management showing that the Representative has been authorized by you to perform the promotion on your behalf.

Project Timeline: Scope work and parking lot sales may happen anytime from February 01, 2016 – July 31, 2016

Store Associate (Management) Responsibilities:

1) Allow and agree upon space with TNT Fireworks to sell fireworks on the parking lot during the Independence Day season
2) Customers and employees of TNT Fireworks may have access to restrooms in Walmart facilities
3) For other questions call Walmart Field Support at 1-700-Walmart
4) Keep a copy of this LOA for your records

This particular program does NOT violate the Walmart Corporate Solicitation Policy.

Best regards,

Jesse Danielson
Manager II, WM Services

Gary Withrow
Senior Director, Walmart Services

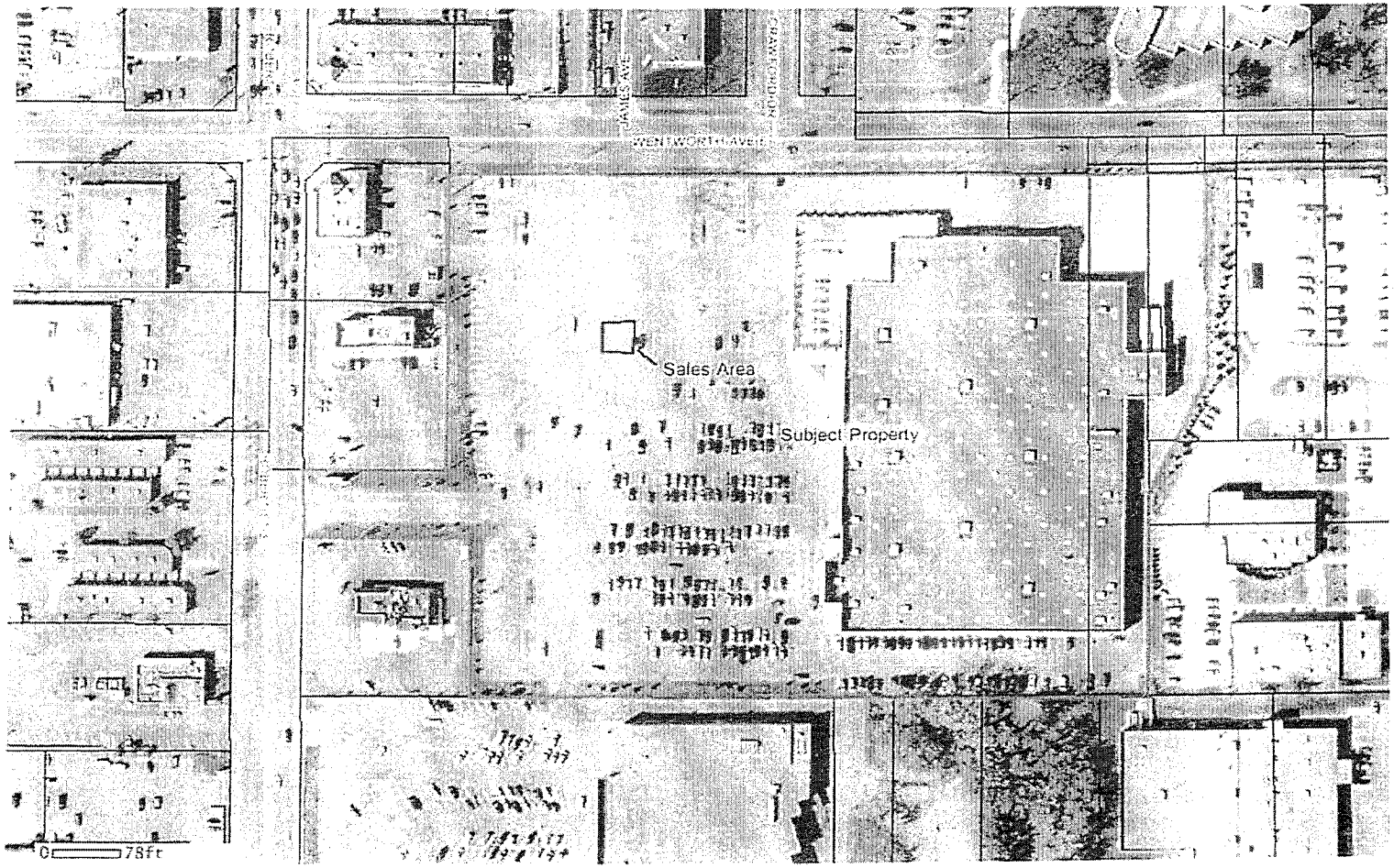
JAMES AVE
CONGRESS PKWY
WENTWORTH AVE
Sales Area
Subject Property
0
78ft

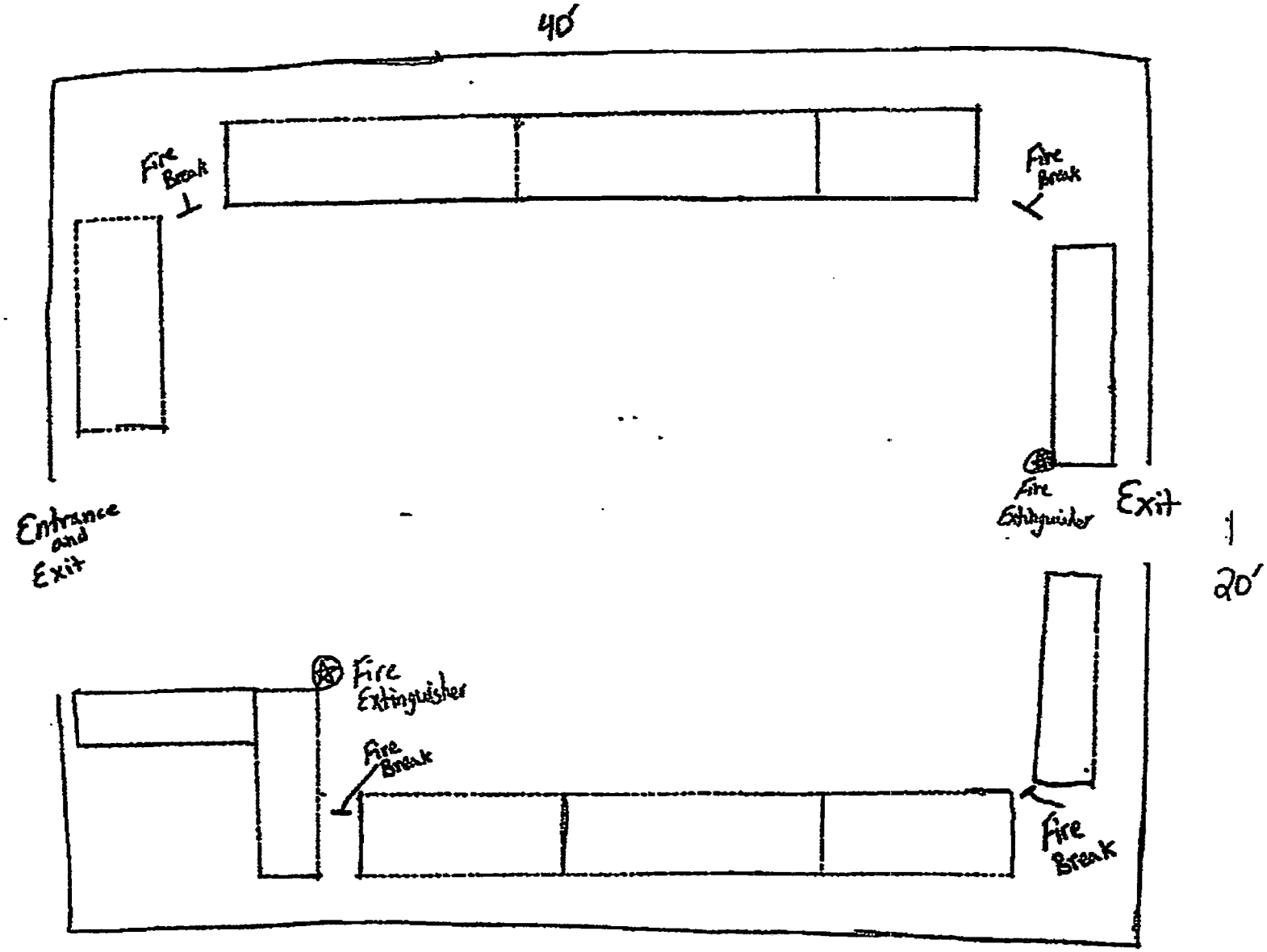
40'
Fire Break
Fire Break
Entrance and Exit
Fire Extinguisher
Exit
20'
Fire Extinguisher
Fire Break
Fire Break

ACORD®

CERTIFICATE OF LIABILITY INSURANCE

11/1/2016

DATE (MM/DD/YYYY): 11/30/2015

THIS CERTIFICATE IS ISSUED AS A MATTER OF INFORMATION ONLY AND CONFERS NO RIGHTS UPON THE CERTIFICATE HOLDER. THIS CERTIFICATE DOES NOT AFFIRMATIVELY OR NEGATIVELY AMEND, EXTEND OR ALTER THE COVERAGE AFFORDED BY THE POLICIES BELOW. THIS CERTIFICATE OF INSURANCE DOES NOT CONSTITUTE A CONTRACT BETWEEN THE ISSUING INSURER(S), AUTHORIZED REPRESENTATIVE OR PRODUCER, AND THE CERTIFICATE HOLDER.

IMPORTANT: If the certificate holder is an ADDITIONAL INSURED, the policy(ies) must be endorsed. If SUBROGATION IS WAIVED, subject to the terms and conditions of the policy, certain policies may require an endorsement. A statement on this certificate does not confer rights to the certificate holder in lieu of such endorsement(s).

PRODUCER
Lockton Companies
3280 Peachtree Road NE, Suite #250
Atlanta GA 30305
(404) 460-3600

CONTACT NAME:
PHONE (A/C, No, Ext):
FAX (A/C, No):
E-MAIL ADDRESS:

INSURER(S) AFFORDING COVERAGE	NAIC #
INSURER A : Everest Indemnity Insurance Company	10851
INSURER B :	
INSURER C :	
INSURER D :	
INSURER E :	
INSURER F :	

INSURED
1359629
American Promotional Events, Inc.
DBA TNT Fireworks, Inc.
P.O. Box 1318
4511 Helton Drive
Florence AL 35630

COVERAGES **CERTIFICATE NUMBER:** 12443969 **REVISION NUMBER:** XXXXXXX

THIS IS TO CERTIFY THAT THE POLICIES OF INSURANCE LISTED BELOW HAVE BEEN ISSUED TO THE INSURED NAMED ABOVE FOR THE POLICY PERIOD INDICATED. NOTWITHSTANDING ANY REQUIREMENT, TERM OR CONDITION OF ANY CONTRACT OR OTHER DOCUMENT WITH RESPECT TO WHICH THIS CERTIFICATE MAY BE ISSUED OR MAY PERTAIN, THE INSURANCE AFFORDED BY THE POLICIES DESCRIBED HEREIN IS SUBJECT TO ALL THE TERMS, EXCLUSIONS AND CONDITIONS OF SUCH POLICIES. LIMITS SHOWN MAY HAVE BEEN REDUCED BY PAID CLAIMS.

INSR LTR	TYPE OF INSURANCE	ADDL INSD	SUBR WVD	POLICY NUMBER	POLICY EFF (MM/DD/YYYY)	POLICY EXP (MM/DD/YYYY)	LIMITS	
A	[X] COMMERCIAL GENERAL LIABILITY	N	N	SI8GL00242-151	11/1/2015	11/1/2016	EACH OCCURRENCE	$ 1,000,000
	[ ] CLAIMS-MADE [X] OCCUR						DAMAGE TO RENTED PREMISES (Ea occurrence)	$ 500,000
							MED EXP (Any one person)	$ 5,000
							PERSONAL & ADV INJURY	$ 1,000,000
	GEN'L AGGREGATE LIMIT APPLIES PER:						GENERAL AGGREGATE	$ 2,000,000
	[ ] POLICY [ ] PRO-JECT [X] LOC						PRODUCTS - COMP/OP AGG	$ 2,000,000
	OTHER:							$
	AUTOMOBILE LIABILITY			NOT APPLICABLE			COMBINED SINGLE LIMIT (Ea accident)	$ XXXXXXX
	[ ] ANY AUTO						BODILY INJURY (Per person)	$ XXXXXXX
	[ ] ALL OWNED AUTOS [ ] SCHEDULED AUTOS						BODILY INJURY (Per accident)	$ XXXXXXX
	[ ] HIRED AUTOS [ ] NON-OWNED AUTOS						PROPERTY DAMAGE (Per accident)	$ XXXXXXX
								$ XXXXXXX
	[ ] UMBRELLA LIAB [ ] OCCUR			NOT APPLICABLE			EACH OCCURRENCE	$ XXXXXXX
	[ ] EXCESS LIAB [ ] CLAIMS-MADE						AGGREGATE	$ XXXXXXX
	[ ] DED [ ] RETENTION $							$ XXXXXXX
	WORKERS COMPENSATION AND EMPLOYERS' LIABILITY			NOT APPLICABLE			[ ] PER STATUTE [ ] OTH-ER	
	ANY PROPRIETOR/PARTNER/EXECUTIVE OFFICER/MEMBER EXCLUDED? Y / N [ ] (Mandatory in NH)	N / A					E.L. EACH ACCIDENT	$ XXXXXXX
	If yes, describe under DESCRIPTION OF OPERATIONS below						E.L. DISEASE - EA EMPLOYEE	$ XXXXXXX
							E.L. DISEASE - POLICY LIMIT	$ XXXXXXX

DESCRIPTION OF OPERATIONS / LOCATIONS / VEHICLES (ACORD 101, Additional Remarks Schedule, may be attached if more space is required)
THIS CERTIFICATE SUPERSEDES ALL PREVIOUSLY ISSUED CERTIFICATES FOR THIS HOLDER, APPLICABLE TO THE CARRIERS LISTED AND THE POLICY TERM(S) REFERENCED.
Additional Insured; WALMART #3364 located at 1644 Robert Street South in West St. Paul, MN 55118 (MN 3364) and Certificate holder is an additional insured on the General Liability as required by written contract subject to policy terms, conditions, and exclusions.

CERTIFICATE HOLDER

12443969
CITY OF WEST ST. PAUL
1616 HUMBOLDT AVENUE
WEST ST. PAUL MN 55118

CANCELLATION

SHOULD ANY OF THE ABOVE DESCRIBED POLICIES BE CANCELLED BEFORE THE EXPIRATION DATE THEREOF, NOTICE WILL BE DELIVERED IN ACCORDANCE WITH THE POLICY PROVISIONS.

AUTHORIZED REPRESENTATIVE

© 1988-2014 ACORD CORPORATION. All rights reserved.

The ACORD name and logo are registered marks of ACORD

JULY	2016	MN 3364	101040	1	SSS	AMERICAN PRIDE S/S GIVEAWAY	WEST ST. PAUL	MN
JULY	2016	MN 3364	101808	2	SSS	TNT BIG TIMER SS J09	WEST ST. PAUL	MN
JULY	2016	MN 3364	102044	2	SSS	GOOD TIME BAG SS COM	WEST ST. PAUL	MN
JULY	2016	MN 3364	102046	2	SSS	PYRO PAK BAG SS COM J10	WEST ST. PAUL	MN
JULY	2016	MN 3364	102048	4	SSS	INDEPENDENCE TRAY SS COM J10	WEST ST. PAUL	MN
JULY	2016	MN 3364	102052	7	SSS	49'ER SS COM J10	WEST ST. PAUL	MN
JULY	2016	MN 3364	102054	2	SSS	ALL AMERICAN SS COM J10	WEST ST. PAUL	MN
JULY	2016	MN 3364	102056	3	SSS	PERFECT SHOW SS COM J10	WEST ST. PAUL	MN
JULY	2016	MN 3364	102201	1	SSS	HOT ZONE SS COM	WEST ST. PAUL	MN
JULY	2016	MN 3364	102351	1	SSS	TNT SACK PACK	WEST ST. PAUL	MN
JULY	2016	MN 3364	190114	8	SSS	GRAB BAG SPECIAL SS SM	WEST ST. PAUL	MN
JULY	2016	MN 3364	190115	4	SSS	GRAB BAG SPECIAL SS LG	WEST ST. PAUL	MN
JULY	2016	MN 3364	200095	1	SSS	CRICKETS FOUNTAIN	WEST ST. PAUL	MN
JULY	2016	MN 3364	200165	1	SSS	JUMBO 20 ROCKET FOUNTAIN	WEST ST. PAUL	MN
JULY	2016	MN 3364	200184	1	SSS	MAD DOG FOUNTAIN	WEST ST. PAUL	MN
JULY	2016	MN 3364	200236	1	SSS	PICCOLO PETE FOUNTAIN	WEST ST. PAUL	MN
JULY	2016	MN 3364	200351	1	SSS	OLD GLORY FOUNTAIN	WEST ST. PAUL	MN
JULY	2016	MN 3364	200352	1	SSS	STARS & STRIPES FOUNTAIN	WEST ST. PAUL	MN
JULY	2016	MN 3364	200368	1	SSS	AMERICAN SPIRIT FTN	WEST ST. PAUL	MN
JULY	2016	MN 3364	200740	1	SSS	LIGHT THE NIGHT J07	WEST ST. PAUL	MN
JULY	2016	MN 3364	200759	1	SSS	PURPLE RAIN FTN J07	WEST ST. PAUL	MN
JULY	2016	MN 3364	200786	1	SSS	MOLTEN POT J08	WEST ST. PAUL	MN
JULY	2016	MN 3364	200792	1	SSS	CASCADING WATERFALL J08	WEST ST. PAUL	MN
JULY	2016	MN 3364	200860	1	SSS	ENCORE J11	WEST ST. PAUL	MN
JULY	2016	MN 3364	200863	1	SSS	CAROUSEL J11	WEST ST. PAUL	MN
JULY	2016	MN 3364	200875	1	SSS	STAR VOYAGER J11	WEST ST. PAUL	MN
JULY	2016	MN 3364	200915	1	SSS	DELIRIUM J11	WEST ST. PAUL	MN
JULY	2016	MN 3364	200917	1	SSS	JUMBO PURPLE RAIN J11	WEST ST. PAUL	MN
JULY	2016	MN 3364	200971	3	SSS	HEATED FOUNTAIN	WEST ST. PAUL	MN
JULY	2016	MN 3364	200994	1	SSS	OPENING SHOW J12	WEST ST. PAUL	MN
JULY	2016	MN 3364	201034	1	SSS	SHOW ME THE MONEY	WEST ST. PAUL	MN
JULY	2016	MN 3364	201085	1	SSS	NEON FORCE	WEST ST. PAUL	MN
JULY	2016	MN 3364	201086	1	SSS	INTO THE NIGHT	WEST ST. PAUL	MN
JULY	2016	MN 3364	201087	1	SSS	MAKE THE GRADE	WEST ST. PAUL	MN
JULY	2016	MN 3364	201092	4	SSS	NEON GALAXY	WEST ST. PAUL	MN
JULY	2016	MN 3364	201139	1	SSS	LET'S DO THIS	WEST ST. PAUL	MN
JULY	2016	MN 3364	201141	1	SSS	ZOMBIE APOCALYPSE J15	WEST ST. PAUL	MN
JULY	2016	MN 3364	201142	1	SSS	SPARKNADO	WEST ST. PAUL	MN
JULY	2016	MN 3364	201145	1	SSS	MR GLOW FUSE	WEST ST. PAUL	MN
JULY	2016	MN 3364	201157	1	SSS	DON'T YOU WISH	WEST ST. PAUL	MN
JULY	2016	MN 3364	201204	2	SSS	ALLEGIANCE	WEST ST. PAUL	MN
JULY	2016	MN 3364	230009	1	SSS	JUMBO CALIFORNIA CANDLE	WEST ST. PAUL	MN
JULY	2016	MN 3364	290040	1	SSS	TNT JUMPING JACKS - 12 PACKS	WEST ST. PAUL	MN
JULY	2016	MN 3364	290067	1	SSS	CRAZY EYE BALLS	WEST ST. PAUL	MN
JULY	2016	MN 3364	290141	1	SSS	CRAZY GROUND HOG XLG. - PK 4	WEST ST. PAUL	MN
JULY	2016	MN 3364	290142	1	SSS	GROUND BLOOM FLOWER PK 6 J07	WEST ST. PAUL	MN

JULY	2016	MN 3364	320478	2	SSS	LIGHTNING FLASH-BOX OF 6 J07	WEST ST. PAUL	MN
JULY	2016	MN 3364	320480	1	SSS	TNT BLASTS BAG OF 6 J07	WEST ST. PAUL	MN
JULY	2016	MN 3364	320482	1	SSS	MR. TURTLE J07	WEST ST. PAUL	MN
JULY	2016	MN 3364	320487	1	SSS	ASST. COLOR SNAKE-TNT J07	WEST ST. PAUL	MN
JULY	2016	MN 3364	320536	4	SSS	POP-IT'S TNT	WEST ST. PAUL	MN
JULY	2016	MN 3364	320569	1	SSS	CAN OF WORMS	WEST ST. PAUL	MN
JULY	2016	MN 3364	320583A	1	SSS	SMALL TANK W STAR 10/12 CC J14	WEST ST. PAUL	MN
JULY	2016	MN 3364	351036	1	SSS	SMOKE BALLS ASST'D TNT J07	WEST ST. PAUL	MN
JULY	2016	MN 3364	380069	3	SSS	MORNING GLORY TNT #10	WEST ST. PAUL	MN
JULY	2016	MN 3364	380088	2	SSS	36 IN MORNING GLORY BAG OF 6	WEST ST. PAUL	MN
JULY	2016	MN 3364	380238	2	SSS	#10 GOLD SPARKLER J09	WEST ST. PAUL	MN
JULY	2016	MN 3364	380245	1	SSS	#20 SPARKLER GOLD J09	WEST ST. PAUL	MN
JULY	2016	MN 3364	380246	2	SSS	MORNING GLORY TORCH 14 IN J09	WEST ST. PAUL	MN
JULY	2016	MN 3364	380288	1	SSS	14"NEON SPARKLER W PDQ NYP J14	WEST ST. PAUL	MN
JULY	2016	MN 3364	390014	1	SSS	PUNK JUMBO J07	WEST ST. PAUL	MN
JULY	2016	MN 3364	673298	1	SSS	COUNTER CASE A NOVELTY SS J14	WEST ST. PAUL	MN
JULY	2016	MN 3364	673465	1	SSS	COUNTER CASE H SM ITEMS SS J15	WEST ST. PAUL	MN
JULY	2016	MN 3364	673508	1	SSS	COUNTER CASE I FOUNTAINS J16	WEST ST. PAUL	MN
JULY	2016	MN 3364	673509	2	SSS	COUNTER CASE J SMOKE J16	WEST ST. PAUL	MN
JULY	2016	MN 3364	730051	1	SSS	BAG - TNT SMALL - 500 EA	WEST ST. PAUL	MN
JULY	2016	MN 3364	730058	1	SSS	BAG - TNT LARGE - 500 EA	WEST ST. PAUL	MN
JULY	2016	MN 3364	730148	1	SSS	WATER CAN EXTINGUISHER	WEST ST. PAUL	MN
JULY	2016	MN 3364	730329	2	SSS	FIRE EXTINGUISHER-10LBCHEMICAL	WEST ST. PAUL	MN
JULY	2016	MN 3364	730470	2	SSS	SIGN - ROCKET FLAGGER J10	WEST ST. PAUL	MN
JULY	2016	MN 3364	730471	2	SSS	SIGN - ROAD ROCKET J10	WEST ST. PAUL	MN
JULY	2016	MN 3364	730495D	1	SSS	KEG, INFLATABLE J11 DP	WEST ST. PAUL	MN
JULY	2016	MN 3364	730506E	1	SSS	ELECTRICAL BOX	WEST ST. PAUL	MN
JULY	2016	MN 3364	932233	1	SSS	SAT CUSTOMER INFORMATION PACK	WEST ST. PAUL	MN

TO: Mayor and City Council

THROUGH: Matt Fulton, City Manager

Jim Hartshorn, Comm. Dev. Dir.

FROM: Ben Boike, Assistant Comm. Dev. Dir.

DATE: May 23, 2016

SUBJECT: Site Plan/CUP/Plat – 1685-1725 Robert St.

City of West St. Paul

BACKGROUND INFORMATION:

Venture Pass Partners, LLC is requesting multiple approvals for the redevelopment of 1685, 1701 and 1725 Robert St.:

1) Site Plan Review for the redevelopment of the property
2) Conditional Use Permit approval to allow a Drive-through Lane and Medical Use
3) Preliminary/Final Plat approval

The applicant is proposing to clear the subject properties and construct two new buildings: 1) a 2,854 sq. ft. drive-through restaurant (Cane's Chicken) to be located at the south end of the property and 2) a three tenant medical/retail building on the north end of the property consisting of a 12,000 sq. ft. plasma center (far north space) and 4,350 sq. ft. of restaurant/retail space.

For more detailed information on the proposed applications please see the attached Planning Commission report.

Committee of Adjustments

The proposed Site Plan is contingent upon the approval of two variances from the Committee of Adjustments. At the May 17, 2016 Committee of Adjustments meeting, the following Variances were approved for the proposed drive-through restaurant located at the south end of the site:

1) Front Yard Building Setback (variance of 11')
2) To allow Parking in the Front Yard Setback (drive aisle)

Planning Commission

The Planning Commission met in regular session on May 17, 2016 and held a public hearing. No one from the public wished to speak on the requests.

The following conditions were amended from Staff's recommendation based on discussion at the meeting:

1) Site Plan Condition 7 – The applicant requested a sunset date of one year for the condition requiring the applicant to provide an access easement benefiting the three property owners to the south should they be agreeable to pay for a drive way

connection to the subject property (plans allow room for a driveway connection from the property to the south in the area west of the drive-through restaurant). The Planning Commission agreed that the applicant should not be held to the requirement for an extended period of time should they want to sell or redevelop that area of the property in the future.

2) Site Plan Condition 12/Plat Condition 4 – The applicant mentioned concerns with one of the recommended conditions provided by the City Civil Engineer (condition 4 in the memo dated May 11, 2016 from the Civil Engineer) requiring 5 foot drainage and utility easements along all interior property lines. Since the plat includes a property line splitting the northern building, the applicant requested that the requirement for a drainage and utility easement not be required for areas under the building. The Planning Commission is therefore recommending the amendment to the condition.

In addition to the items mentioned above, there was discussion regarding concerns relating to internal traffic flow and being able to accommodate the increase in traffic coming to and from the light at Lothenbach. Staff mentioned the recommended condition of approval from the City Civil Engineer to require a traffic study.

The Commission also inquired as to whether the windows on the proposed medical building will be regular windows or spandrel glass. The applicant stated that they will try to maximize the amount of regular glass but that some areas may require spandrel glass depending on the final interior layout.

The Planning Commission voted as follows:

1) Site Plan- Planning Commission voted 7-0 to recommend approval subject to the listed conditions below *(conditions 7 and 12 amended).*

2) Conditional Use Permit for a Medical Clinic - Planning Commission voted 7-0 to recommend approval subject to the listed condition below.

3) Conditional Use Permit for a Drive-through Lane – Planning Commission voted 7-0 to recommend approval subject to the listed conditions below.

4) Conditional Use Permit for Outdoor Seating – Planning Commission voted 7-0 to recommend approval subject to the listed conditions below.

5) Preliminary/Final Plat – Planning Commission voted 7-0 to recommend approval subject to the listed conditions below *(condition 4 amended).*

FISCAL IMPACT:

		Amount
Fund:		
Department:		
Account:		**N/A**

STAFF RECOMMENDATION:

Staff recommends that the City Council hold the public hearing and approve the Site Plan, three Conditional Use Permits and the Preliminary/Final Plat subject to the listed conditions as follows *(amendments from the Planning Commission noted in italics):*

Staff recommends APPROVAL of the SITE PLAN for the redevelopment of 1685, 1701 and 1725 Robert St. subject to the following conditions:

1. Council approval of the corresponding Variance, Conditional Use Permit, and Plat applications.
2. The applicant shall apply for all applicable building and sign permits. All new signage must meet requirements of Section 37 of the Zoning Ordinance.
3. The elevations for medical/retail building shall be revised to meet the building material requirements as outlined in Section 153.032(F)(1) and the visual relief requirements as outlined in Section 153.032(F)(4).
4. The elevations for the proposed drive-through restaurant shall be revised to meet the window coverage requirement as outlined in Section 153.032(F)(3).
5. All rooftop mechanical protrusions shall be properly screened as outlined in Section 153.032(F)(5), as determined by the City Planner.
6. The applicant shall revise the civil plans as follows:

    a. Show the proposed property lines on the site plan.
    b. Shift the western property line of the drive-through restaurant to the west 10 feet to meet the rear yard parking setback.
    c. Narrow the proposed one-way drive aisle connecting the drive-through restaurant parking lot and the parking lot to the north to 15 ft. in width.
    d. Provide adequate signage as it relates to the one-way drive aisles.
    e. Include landscaped islands, at least 8 feet in width, in the three most western rows of parking in the north parking lot. Said islands shall be irrigated and include at least one quality tree as detailed in Section 153.032 (E)(3) of the Zoning Ordinance.
7. The applicant shall provide access easements for the three properties within the subject development providing access through each lot. In addition, the applicant shall provide an access easement benefiting up to the three properties to the south should they be agreeable to construction of improvements in order connect the three parking lots located south of the development under review to the east/west drive aisle that connects to Livingston Ave. *The adjacent property owner immediately to the south has one year from the date of Council approval to agree to the required improvements and access easements. Applicant shall make a good faith effort to coordinate and obtain access easements for all three properties. However, if no agreement is in place within one year, the applicant shall not be required to provide an access easement on their property.*

8.

8. The proposed trash enclosure shall meet the requirements as outlined in Section 153.032 (F)(6). In addition, the applicant shall provide elevations of the proposed enclosure upon application of building permit.
9. The applicant shall provide a sidewalk connection to both buildings from Livingston Ave. In addition, the applicant shall also revise the plans to include bike racks at the main doors of each building as approved by Staff.
10. The applicant shall revise the lighting plan to include wall lighting on the east façade of the medical/retail building consistent to what is proposed on the west façade as approved by Staff.
11. The applicant shall revise the site plan to only include one monument sign per property.
12. The applicant shall adhere the recommendations outlined in the attached memos provided by the City Civil Engineer, the Fire Marshal, the Environmental Committee and MnDOT. *Condition 4, as stated in the memo dated May 11, 2016 from the City Civil Engineer, shall be revised to exclude the requirement of a drainage and utility easement adjacent to the property line splitting lots 2 and 3 in the areas underneath the proposed building.*

Staff recommends APPROVAL of the CONDITIONAL USE PERMIT to allow a MEDICAL CLINIC subject to the following conditions:

1. Council approval of the corresponding Variance, Site Plan, and Plat applications.

Staff recommends APPROVAL of the CONDITIONAL USE PERMIT to allow a DRIVE-THROUGH LANE subject to the following conditions:

1. Council approval of the corresponding Variance, Site Plan, and Plat applications.
2. The Drive-through lane must adhere to the requirements outlined in 153.156(D) of the Zoning Ordinance.

Staff recommends APPROVAL of the CONDITIONAL USE PERMIT to allow OUTDOOR SEATING subject to the following conditions:

1. Council approval of the corresponding Site Plan and Plat applications.
2. The outdoor seating area must meet the provisions as outlined in Section 153.156(G).

Staff recommends APPROVAL of the PRELIMINARY/FINAL PLAT subject to the following conditions:

1. Council approval of the corresponding Variance, Site Plan, and Conditional Use Permit applications.
2. The plat shall be recorded at the County Recorder Office prior to application of a building permit.
3. Provide documentation for proposed private easements as required per the Site Plan approval.

4. The Plat shall adhere to the recommendations as outlined by the City Engineer and MnDOT per their submitted memos. *Condition 4, as stated in the memo dated May 11, 2016 from the City Civil Engineer, shall be revised to exclude the requirement of a drainage and utility easement adjacent to the property line splitting lots 2 and 3 in the areas underneath the proposed building.*

CITY OF WEST ST. PAUL
DAKOTA COUNTY, MINNESOTA

RESOLUTION NO. 16-

A RESOLUTION APPROVING THE SITE PLAN
FOR 16XX-17XX ROBERT ST
(VENTURE PASS PARTNERS, LLC)

WHEREAS, a Final Site Plan has been submitted to the City for properties legally described as:

CURRENT:
LOT 1 - E 280 FT OF N 133.19 FT OF N 266.38 FT OF S 466.38 FT OF N 1416.26 FT OF E 477 FT OF W 1/2 OF SW 1/4 EX E 40 FT FOR ROBERT ST SUBJ TO EASE, SECTION 20 TWN 28 RANGE 22

LOT 2 - LOT 1, BLOCK 1 ROBERT STREET SONIC ADDITIION

LOT 3 - S 200 FT OF N 1416.26 FT OF E 477 FT OF W 1/2 OF SW 1/4 EX W 12 FT & EX PT TO HWY SUBJ TO EASE, SECTION 20 TWN 28 RANGE 22

PROPOSED PLAT:
LOTS 1-3, BLOCK 1 ROBERT STREET RILEY ADDITION

WHEREAS, a public hearing concerning the Site Plan was held before the West St. Paul Planning Commission on May 17, 2016; and

WHEREAS, the West St. Paul Planning Commission has recommended that the City Council of West St. Paul approve the Site Plan.

NOW THEREFORE BE IT RESOLVED BY THE CITY COUNCIL OF WEST ST. PAUL that the Site Plan for 16XX-17XX Robert St. (properties to be readdressed) requested by Venture Pass Partners, LLC is hereby approved subject to the following conditions:

1. Council approval of the corresponding Variance, Conditional Use Permit, and Plat applications.
2. The applicant shall apply for all applicable building and sign permits. All new signage must meet requirements of Section 37 of the Zoning Ordinance.
3. The elevations for medical/retail building shall be revised to meet the building material requirements as outlined in Section 153.032(F)(1) and the visual relief requirements as outlined in Section 153.032(F)(4).
4. The elevations for the proposed drive-through restaurant shall be revised to meet the window coverage requirement as outlined in Section 153.032(F)(3).
5. All rooftop mechanical protrusions shall be properly screened as outlined in Section 153.032(F)(5), as determined by the City Planner.
6. The applicant shall revise the civil plans as follows:

a. Show the proposed property lines on the site plan.

b. Shift the western property line of the drive-through restaurant to the west 10 feet to meet the rear yard parking setback.

c. Narrow the proposed one-way drive aisle connecting the drive-through restaurant parking lot and the parking lot to the north to 15 ft. in width.

d. Provide adequate signage as it relates to the one-way drive aisles.

e. Include landscaped islands, at least 8 feet in width, in the three most western rows of parking in the north parking lot. Said islands shall be irrigated and include at least one quality tree as detailed in Section 153.032 (E)(3) of the Zoning Ordinance.

7. The applicant shall provide access easements for the three properties within the subject development providing access through each lot. In addition, the applicant shall provide an access easement benefiting up to the three properties to the south should they be agreeable to construction of improvements in order connect the three parking lots located south of the development under review to the east/west drive aisle that connects to Livingston Ave. The adjacent property owner immediately to the south has one year from the date of Council approval to agree to the required improvements and access easements. Applicant shall make a good faith effort to coordinate and obtain access easements for all three properties. However, if no agreement is in place within one year, the applicant shall not be required to provide an access easement on their property.

8. The proposed trash enclosure shall meet the requirements as outlined in Section 153.032 (F)(6). In addition, the applicant shall provide elevations of the proposed enclosure upon application of building permit.

9. The applicant shall provide a sidewalk connection to both buildings from Livingston Ave. In addition, the applicant shall also revise the plans to include bike racks at the main doors of each building as approved by Staff.

10. The applicant shall revise the lighting plan to include wall lighting on the east façade of the medical/retail building consistent to what is proposed on the west façade as approved by Staff.

11. The applicant shall revise the site plan to only include one monument sign per property.

12. The applicant shall adhere the recommendations outlined in the attached memos provided by the City Civil Engineer, the Fire Marshal, the Environmental Committee and MnDOT. Condition 4, as stated in the memo dated May 11, 2016 from the City Civil Engineer, shall be revised to exclude the requirement of a drainage and utility easement adjacent to the property line splitting lots 2 and 3 in the areas underneath the proposed building.

Passed by the City Council of the City of West St. Paul this 23rd day of May, 2016.

Ayes: Nays:

Attest:

Dave Meisinger, Mayor

Chantal Doriott, City Clerk

CITY OF WEST ST. PAUL
DAKOTA COUNTY, MINNESOTA

RESOLUTION NO. 16-

A RESOLUTION APPROVING A CONDITIONAL USE PERMIT TO ALLOW A DRIVE-THROUGH LANE IN A B3 DISTRICT AT 17XX ROBERT ST. (CANES CHICKEN) VENTURE PASS PARTNERS, LLC

WHEREAS, a Conditional Use Permit application has been submitted to the City for property legally described as:

LOT 1, BLOCK 1 ROBERT STREET RILEY ADDITION

WHEREAS, a public hearing concerning the Conditional Use Permit was held before the West St. Paul Planning Commission on May 17, 2016; and

WHEREAS, the West St. Paul Planning Commission has recommended that the City Council of West St. Paul approve the Conditional Use Permit.

NOW THEREFORE BE IT RESOLVED BY THE CITY COUNCIL OF WEST ST. PAUL that the Conditional Use Permit for 17XX Robert St. requested by Venture Pass Partners, LLC. is hereby approved subject to the following conditions:

1. Council approval of the corresponding Variance, Site Plan, and Plat applications.
2. The Drive-through lane must adhere to the requirements outlined in 153.156(D) of the Zoning Ordinance.

Passed by the City Council of the City of West St. Paul this 23rd day of May, 2016.

Ayes: Nays:

Attest:

David Meisinger, Mayor

Chantal Doriott, City Clerk

CITY OF WEST ST. PAUL
DAKOTA COUNTY, MINNESOTA

RESOLUTION NO. 16-

A RESOLUTION APPROVING A CONDITIONAL USE PERMIT TO ALLOW A MEDICAL OFFICE (PLASMA CENTER) IN A B3 DISTRICT AT 16XX ROBERT ST. VENTURE PASS PARTNERS, LLC

WHEREAS, a Conditional Use Permit application has been submitted to the City for property legally described as:

LOT 3, BLOCK 1 ROBERT STREET RILEY ADDITION

WHEREAS, a public hearing concerning the Conditional Use Permit was held before the West St. Paul Planning Commission on May 17, 2016; and

WHEREAS, the West St. Paul Planning Commission has recommended that the City Council of West St. Paul approve the Conditional Use Permit.

NOW THEREFORE BE IT RESOLVED BY THE CITY COUNCIL OF WEST ST. PAUL that the Conditional Use Permit for 17XX Robert St. requested by Venture Pass Partners, LLC. is hereby approved subject to the following conditions:

1. Council approval of the corresponding Variance, Site Plan, and Plat applications.

Passed by the City Council of the City of West St. Paul this 23rd day of May, 2016.

Ayes: Nays:

Attest:

David Meisinger, Mayor

Chantal Doriott, City Clerk

CITY OF WEST ST. PAUL
DAKOTA COUNTY, MINNESOTA

RESOLUTION NO. 16-

A RESOLUTION APPROVING A CONDITIONAL USE PERMIT TO ALLOW OUTDOOR SEATING IN A B3 DISTRICT AT 17XX ROBERT ST. VENTURE PASS PARTNERS, LLC

WHEREAS, a Conditional Use Permit application has been submitted to the City for property legally described as:

LOT 2, BLOCK 1 ROBERT STREET RILEY ADDITION

WHEREAS, a public hearing concerning the Conditional Use Permit was held before the West St. Paul Planning Commission on May 17, 2016; and

WHEREAS, the West St. Paul Planning Commission has recommended that the City Council of West St. Paul approve the Conditional Use Permit.

NOW THEREFORE BE IT RESOLVED BY THE CITY COUNCIL OF WEST ST. PAUL that the Conditional Use Permit for 17XX Robert St. requested by Venture Pass Partners, LLC. is hereby approved subject to the following conditions:

1. Council approval of the corresponding Variance, Site Plan, and Plat applications.
2. The outdoor seating area must meet the provisions as outlined in Section 153.156(G).

Passed by the City Council of the City of West St. Paul this 23rd day of May, 2016.

Ayes: Nays:

Attest:

David Meisinger, Mayor

Chantal Doriott, City Clerk

CITY OF WEST ST. PAUL
DAKOTA COUNTY, MINNESOTA

RESOLUTION NO. 16-

A RESOLUTION APPROVING THE
FINAL PLAT FOR 1685-1625 ROBERT STREET
(VENTURE PASS PARTNERS, LLC)

WHEREAS, a Final Plat has been submitted to the City for properties legally described as:

> LOT 1 - E 280 FT OF N 133.19 FT OF N 266.38 FT OF S 466.38 FT OF N 1416.26 FT OF E 477 FT OF W 1/2 OF SW 1/4 EX E 40 FT FOR ROBERT ST SUBJ TO EASE, SECTION 20 TWN 28 RANGE 22
>
> LOT 2 - LOT 1, BLOCK 1 ROBERT STREET SONIC ADDITIION
>
> LOT 3 - S 200 FT OF N 1416.26 FT OF E 477 FT OF W 1/2 OF SW 1/4 EX W 12 FT & EX PT TO HWY SUBJ TO EASE, SECTION 20 TWN 28 RANGE 22

WHEREAS, a public hearing concerning the Final Plat was held before the West St. Paul Planning Commission on May 17, 2016; and

WHEREAS, the proposed Final Plat is in accordance with the Subdivision requirements; and

WHEREAS, the West St. Paul Planning Commission has recommended that the City Council of West St. Paul approve the Final Plat.

NOW THEREFORE BE IT RESOLVED BY THE CITY COUNCIL OF WEST ST. PAUL that the Final Plat for lots currently addressed 1685-1725 Robert St. (Venture Pass Partners, LLC) is hereby approved subject to the following conditions:

1. Council approval of the corresponding Variance, Site Plan, and Conditional Use Permit applications.
2. The plat shall be recorded at the County Recorder Office prior to application of a building permit.
3. Provide documentation for proposed private easements as required per the Site Plan approval.
4. The Plat shall adhere to the recommendations as outlined by the City Engineer and MnDOT per their submitted memos. Condition 4, as stated in the memo dated May 11, 2016 from the City Civil Engineer, shall be revised to exclude the requirement of a drainage and utility easement adjacent to the property line splitting lots 2 and 3 in the areas underneath the proposed building.

Passed by the City Council of the City of West St. Paul this 23rd day of May, 2016.

Ayes: Nays:

Attest:

_____ _____

David Meisinger, Mayor Chantal Doriott, City Clerk

TO: Planning Commission

FROM: Ben Boike, Assistant Comm. Dev. Dir.

DATE: May 17, 2016

SUBJECT: Case #16-06

City of West St. Paul

REQUEST

Venture Pass Partners, LLC is requesting the following applications for the redevelopment of 1675, 1701 and 1725 Robert St.:

1) Site Plan Review for the redevelopment of the property
2) Conditional Use Permit approval to allow a Drive-through Lane and Medical Use
3) Preliminary/Final Plat approval

Attachments:
Memos from the City Civil Engineer, Fire Marshal & the Environmental Comm.
Applications/Notice
Copies of submitted Architectural plans and the Preliminary/Final Plat*
**Submitted Civil plans are included with the Variance memo*

EXISTING LAND USES

The subject properties currently consist of two vacant bank buildings and a vacant drive-through restaurant. Adjacent properties to the north, east and south consist of

commercial/office uses. Adjacent properties to the west consist of multi-family housing.

ZONING

The subject properties and the adjacent properties to the north are zoned B3, General Business. Adjacent properties to the east and south are zoned B3, General Business and B4, Shopping Center. Adjacent properties to the west are zoned R4, Multiple Family.

SITE PLAN ANALYSIS

Proposal

The applicant is proposing to clear the subject properties and construct two new buildings: 1) a 2,854 sq. ft. drive-through restaurant (Cane's Chicken) to be located at the south end of the property and 2) a three tenant medical/retail building on the north end of the property consisting of a 12,000 sq. ft. plasma center (far north space) and 4,350 sq. ft. of restaurant/retail space.

Building Materials

Section 153.032(F)(1) of the Zoning Ordinance requires that exterior building materials be comprised of a minimum 60 percent primary materials (brick, stone, stucco, or glass). Secondary materials which includes decorative block, synthetic stucco, wood and metal, may only account for 40 percent of the façade.

Medical/Retail Building: The applicant is proposing a combination of brick (primary), glass (primary), synthetic stucco (secondary), metal (secondary), and precast concrete (not listed)(see submitted building elevations). Staff is recommending a condition of approval requiring that the elevations be revised to meet the building material requirements as outlined in Section 153.032(F).

Drive-through Restaurant: The applicant is proposing brick (primary), stucco (primary), glass (primary), and metal (secondary). The proposed building meets the requirements.

Window Coverage

Section 153.032(F)(3) requires 40 percent window coverage for all facades facing a street, parking lot, or open space.

Medical/Retail Building: The proposed building meets the 40 percent requirement.

Drive-through Restaurant: The proposed building does not meet the 40 percent requirement. Staff is recommending a condition of approval that the elevations for the proposed drive-through restaurant be revised to meet the window coverage requirement as outlined in Section 153.032(F)(3).

Visual Relief
Section 153.032(F)(4) requires that all exterior elevations adjacent to a street, parking lot or open space must not exceed 60 feet in length without visual relief of two or more of the following:

(a) The facade is divided architecturally with different materials or textures;
(b) There are horizontal offsets of at least two feet in depth;
(c) There are vertical offsets in the roof line of at least two feet; and
(d) The windows on the first floor are recessed horizontally at least one foot.

Medical/Retail Building: The proposed building does not meet the visual relief requirements. The building does meet requirement (a), but does not meet one of the other three requirements. The building does have a few horizontal offsets (requirement b), but there are sections of wall that exceed 60 feet without the offset. Staff is recommending a condition of approval that the elevations be revised to meet the visual relief requirements as outlined in Section 153.032(F)(4).

Drive-through Restaurant: The proposed building meets the visual relief requirements.

Rooftop Mechanicals
The proposed plans do not address whether or not rooftop mechanicals will be properly screened as required by the Zoning Ordinance. Staff recommends a condition of approval requiring that all rooftop mechanicals be screened per Section 153.032(F)(5).

Building Setbacks
The proposed building meets all setback requirements with the exception of the Front Yard Setback for the proposed drive-through restaurant (see site plan – C3.01).

The Zoning Ordinance requires a Front Yard Building Setback of 10-40 feet in the B3 District. The applicant is proposing a Front Yard Building Setback of 51 feet requiring a Variance of 11 feet. The applicant has applied for a Variance for the setback. Staff is recommending a condition of approval that approval of the Site Plan be contingent on approval of the corresponding Variance.

Parking Setbacks
The proposed parking lots meet all setback requirements with the exception of the Front Yard Parking Setback and the Rear Yard Parking Setback for the proposed drive-through restaurant (see C3.01).

1. Front Yard Parking Setback – the Zoning Ordinance does not allow parking in the Front Yard in the B3 District. The proposed plans call for a drive aisle between the proposed drive-through restaurant and the front property line which is needed to avoid a second curb cut to Robert St. The applicant has applied for Variance to allow the drive aisle. Staff is recommending a condition of approval that approval of the Site Plan be contingent on approval of the corresponding Variances.

2. Rear Yard Parking Setback – the Zoning Ordinance requires a minimum Rear Yard Parking Setback of 10 feet in the B3 District. The proposed Site Plan shows a 0 ft. rear yard parking setback for the proposed drive-through restaurant property (see utility plan or landscape plan as the site plan does not show the proposed property lines). Staff discussed the requirement with the applicant who has agreed to shift the proposed property line to the west 10 feet to provide the required setback. Staff is recommending a condition of approval requiring that the applicant shift the property line accordingly on the proposed plan. In addition, Staff is recommending a condition of approval to show the property lines on the site plan.

Access

The proposed plans reduce the number of access points to Robert St. from 4 curb cuts down to 2 curb cuts. Full access to the site from Robert St. will be provided at the lighted intersection of Robert St. and Lothenbach. In addition, a right-in/right-out is proposed at the north end of the site for additional access to and from Robert St. The proposed development also includes a connection to Livingston Ave to the west.

The applicant is also proposing an internal drive-way connection to the adjacent property to the north (Party City parking lot). The proposed site plan also allows for another internal driveway connection to the properties to the south in the area west of the proposed Drive-through restaurant (west of the proposed retaining wall). This connection would allow for the three properties to the south to access both Livingston and the light at Lothenbach. Staff is recommending a condition of approval requiring the applicant to provide an access easement in this area benefiting the three properties to the south should they be agreeable to improvements connecting the parking lots.

Internal Traffic Flow

The applicant is proposing one-way drive aisle connections to and from the Lothenbach/Robert St. intersection to the northern portion of the property. As vehicles enter the property from the light at Lothenbach and Robert St. (in front of the proposed drive-through restaurant on the south end of the property), they can either proceed straight ahead to access the drive-through restaurant or turn to the right (north) to access the medical/retail uses on the north end of the site via a one-way drive. The applicant is proposing a second one-way drive-aisle along the west and south sides of the proposed drive-through restaurant to provide connection back to the light at Robert St.

Staff is recommending a condition of approval requiring that one-way drive aisle connecting the drive-through restaurant parking lot and the parking lot to the north to 15 ft. in width. In addition, Staff is recommending a condition of approval that the applicant work with Staff in providing adequate internal signage as it relates to the one-way drive aisles.

Parking Lot Islands
The Zoning Ordinance requires landscaped islands at the end every twenty consecutive parking stalls. The proposed site plan includes three rows of parking that exceed twenty stalls in length. Staff is recommending a condition of approval that the civil plans be revised to include a landscaped island, at least 8 feet in width, in the three most western rows of parking in the north parking lot. Said islands shall be placed in the stalls that are currently shown as being split by the proposed property line to provide a buffer between lots. Said islands shall be irrigated and include one quality tree as detailed in Section 153.032 (E)(3) of the Zoning Ordinance.

Parking Requirements
The proposed site plan includes the following number of parking stalls per lot:

Lot 1 (Drive-through restaurant): 26 stalls are required, a total of 32 stalls are proposed.

Lot 2 (two-tenant retail portion of northern building): 22 stalls are required, a total of 84 stalls are proposed (24 adjacent to the building, 60 on the west side of the property which are to be utilized as employee and/or overflow parking for both the medical and retail buildings).

Lot 3 (medical building): 58 stalls are required, a total of 56 are proposed. Since Lot 3 does not contain enough parking on its own, Staff is recommending a condition of approval requiring a parking agreement be recorded for the retail lot benefiting the medical lot.

Access Easements:
Since the plan provides parking lot connectivity for all three lots, Staff is recommending a condition of approval requiring access easements on all three lots benefiting the other lots.

Drive Aisles/Parking Stall Dimensions
All proposed drive aisles and all parking stall dimensions meet minimum requirements.

Trash Enclosure
The applicant is proposing to include a trash enclosure located northwest of the proposed drive-through restaurant. Staff is recommending a condition of approval requiring that the proposed trash enclosure meet the requirements as outlined in Section 153.032 (F)(6). In addition, the applicant shall provide elevations of the proposed enclosure upon application of building permit.

Sidewalks
The applicant is proposing sidewalk connections to both buildings from Robert St. Staff is recommending a condition of approval to provide a sidewalk connection to both buildings from Livingston Ave.

Bike Racks
Staff is recommending a condition of approval requiring the applicant to revise the plans by including bike racks adjacent to the drive-through restaurant, the main doors for the medical building and in the sidewalk area near the front entries of the retail spaces.

Landscaping
The Zoning Ordinance requires a total of 89 trees on-site (1 tree per 20 lineal ft. of property). The applicant is proposing a total of 32 deciduous trees at 2.5 caliper inches, 11 coniferous trees at six feet in height, and 7 ornamental trees for a total of 50 trees (see second page of plans). With the exception of requiring two landscaped islands in the middle of the northernmost parking lot (which will include two more trees), Staff is comfortable with the proposed landscaping despite the reduction in required trees. Staff believes that the proposed plan distributes trees appropriately in areas where they can be located plus the applicant is proposing a total of 353 perennials, grasses and shrubs for the site.

Environmental Committee
The landscape plan was reviewed by the Environmental Committee at their May 4 meeting (see attached memo). The committee recommended a condition strongly encouraging the developer to use "pollinator friendly" plantings that were not grown with "neonicotinoids".

Irrigation
The Zoning Code requires all landscaped areas to be irrigated. The proposed landscape plan states that an irrigation system will be installed (see L1.02).

Lighting
The applicant is proposing a variety of lighting for the property, including ten (10) twenty-foot tall single lamp LED light fixtures for the parking lots and three (3) wall mounted lights for the proposed drive-through restaurant and eight (8) wall mounted lights on the proposed medical/retail building.

The Zoning Ordinance requires that all lighting be at or near zero for all property lines. The proposed lighting plan indicates that lighting extends beyond the property lines however since the adjacent properties are all commercial in nature Staff is not concerned.

Staff is recommending a condition of approval to add wall mounted lighting to the east wall (Robert St. side) of the medical/retail building to provide additional security during the night hours.

Signage
The proposed plans show a total of three monument signs, two on the south lot (Drive-through Restaurant), no signs on the middle lot (two tenant retail), and one for the northern lot (medical). The Zoning Ordinance only allows one monument sign per property. As a result, Staff is recommending a condition of approval requiring

that the plans be revised to limit the number of monument signs to one sign per property. In addition, all signage must meet the provisions as outlined in Section 153.435 of the Zoning Ordinance.

Engineer's Recommendation
The City Engineer has provided a memo with twelve (12) recommended conditions pertaining to the Site Plan (see attached memo). Staff is recommending a condition of approval that the applicant adhere to the recommendations in the memo. The conditions are as follows:

1. Permits from the appropriate regulatory agencies must be obtained, including but not limited to the MPCA, Dakota County, MnDOT, etc.
2. Parkland dedication shall be paid upon application of a building permit. Fee shall be in accordance to City Ordinance, Section 1022.11.
3. Provide documentation for proposed private easements.
4. Add 10' drainage and utility easement where proposed plat abuts the public right-of-way. Add 5' drainage and utility easement around interior property lines.
5. Provide a traffic study showing the functionality and operability of the Lothenbach & Robert St. intersection with the proposed commercial land uses.
6. On all plan view sheets, update geometric and utility (drainage) files to show proposed Robert St. Improvement Project. (electronic files to be provided by WSP Engineering Dept.).
7. Provide detailed plans and specifications for retaining walls over 4 feet in height signed by a Minnesota Professional Structural Engineer.
8. On sheet C5.01 and C5.02, move inlet protection symbols to the location of the proposed catch basins along Robert St.
9. On sheets C5.03 and C7.01;
    a. Replace generic standard detail plates with WSP city plates (electronic files to be provided by WSP Engineering Dept.).
    b. Add any applicable Mn/DOT or Saint Paul Regional Water Services (SPRWS) standard details.
10. On sheet C6.01;
    a. Change storm sewer pipe material to Reinforced Concrete Pipe (RCP CL V) in any areas beneath a roadway or paved surface. For areas outside roadway, the City will allow HDPE pipe. Minimum pipe size is 12".
    b. Cleanouts are required every 100' on sanitary sewer lines. Show these cleanouts on the plans.
    c. Include language referring to City Standards for design standards and specifications.
11. On sheet L1.01, update plan view to include the landscaping portion of the Robert St. Improvement Project (electronic files to be provided by WSP Engineering Dept.).

12. Address any and all issues set forth by Mn/DOT review dated May 11, 2016 titled Robert St. Riley Addition Mn/DOT Review #P16-017.

Fire Marshal Recommendation
The Fire Marshal has provided a memo with two (2) recommended conditions pertaining to the site plan (see attached memo). Staff is recommending a condition of approval that the applicant adhere to the recommendations in the memo. The conditions are as follows:

1. A 50' outside turning radius is required for all access roads. MSFC 503.2.4.

2. The grade of the access road shall be less than 8%. MSFC 503.2.7.

MnDOT Recommendation
Since the subject property abuts Robert St., which is a State Road, MnDOT reviewed the proposed Site Plan and provided the attached letter dated May 11, 2016. MnDOT is requesting more information regarding the proposed right-of-way shown on the plat and is requiring a drainage and access permits. They are also concerned about traffic circulation within the site, specifically the drive-through operation consistent with the comments/recommendations from the Civil Engineer. Staff is recommending a condition of approval requiring that the applicant adhere to the requests of MnDOT.

CONDITIONAL USE PERMIT ANALYSIS

Zoning Code
The Zoning Code requires a Conditional Use Permits for all Medical Clinics, Drive-through Lanes and Outdoor Seating areas.

Analysis
Medical Clinic – The applicant is proposing to locate a 12,000 medical use (plasma center) at the north end of the property. The proposed Use is currently in operation at 1857 Robert St. in the Southview Square shopping center (Talecris).

The current operation has 25 employees. This location will allow them to expand up to 45 employees. Proposed hours of operation will remain the same which are 8:00am-6:00pm Tues-Thursday, 8:00am-4:00pm Monday, Friday, and Saturday and closed on Sunday.

Staff is unaware of any issues with the existing operation.

Drive-through Lane – The applicant is proposing a Drive-through Lane for the proposed 2,854 sq. ft. restaurant. The proposed drive-through lane meets the requirements outlined in Section 153.156(D) of the Zoning Ordinance.

Outdoor Seating – The applicant is proposing an outdoor seating area for the 2,800 sq. ft. "retail" space in the northern building. Details regarding the patio area are dependent upon the tenant and therefore are unknown at this time. Staff is

recommending a condition of approval requiring that the outdoor seating area meet the provisions as outlined in Section 153.156 (G).

PRELIMINARY/FINAL PLAT ANALYSIS

Plat Summary
The existing site contains three parcels, two of which are currently unplatted (1675 and 1725 Robert) and one that is platted (1701 Robert). The applicant is proposing to plat the three parcels into three new parcels. In doing so, the property lines are shifting to accommodate the three different uses on the site.

Engineer's Recommendation
Staff is recommending a condition of approval that the plat be subject to the recommendations provided by the City Civil Engineer.

MnDOT Recommendation
Staff is recommending a condition of approval that the plat be subject to the recommendations provided by MnDOT.

STAFF RECOMMENDATION

Staff recommends APPROVAL of the SITE PLAN subject to the following conditions:

1. Council approval of the corresponding Variance, Conditional Use Permit, and Plat applications.
2. The applicant shall apply for all applicable building and sign permits. All new signage must meet requirements of Section 37 of the Zoning Ordinance.
3. The elevations for medical/retail building shall be revised to meet the building material requirements as outlined in Section 153.032(F)(1) and the visual relief requirements as outlined in Section 153.032(F)(4).
4. The elevations for the proposed drive-through restaurant shall be revised to meet the window coverage requirement as outlined in Section 153.032(F)(3).
5. All rooftop mechanical protrusions shall be properly screened as outlined in Section 153.032(F)(5), as determined by the City Planner.
6. The applicant shall revise the civil plans as follows:

    a. Show the proposed property lines on the site plan.
    b. Shift the western property line of the drive-through restaurant to the west 10 feet to meet the rear yard parking setback.
    c. Narrow the proposed one-way drive aisle connecting the drive-through restaurant parking lot and the parking lot to the north to 15 ft. in width.
    d. Provide adequate signage as it relates to the one-way drive aisles.
    e. Include landscaped islands, at least 8 feet in width, in the three most western rows of parking in the north parking lot. Said islands shall be

placed in the stalls that are currently shown as being split by the proposed property line to provide a buffer between the two lots. Said islands shall be irrigated and include at least one quality tree as detailed in Section 153.032 (E)(3) of the Zoning Ordinance.

7. The applicant shall provide an access easement benefiting the three properties to the south should they be agreeable to construction of improvements in order connect the three parking lots located south of the development under review to the east/west drive aisle that connects to Livingston Ave. In addition, the applicant shall also provide access easements for the three properties within the subject development providing access through each lot.
8. The proposed trash enclosure shall meet the requirements as outlined in Section 153.032 (F)(6). In addition, the applicant shall provide elevations of the proposed enclosure upon application of building permit.
9. The applicant shall provide a sidewalk connection to both buildings from Livingston Ave. In addition, the applicant shall also revise the plans to include bike racks at the main doors of each building as approved by Staff.
10. The applicant shall revise the lighting plan to include wall lighting on the east façade of the medical/retail building consistent to what is proposed on the west façade as approved by Staff.
11. The applicant shall revise the site plan to only include one monument sign per property.
12. The applicant shall adhere the recommendations outlined in the attached memos provided by the City Civil Engineer, the Fire Marshal, the Environmental Committee and MnDOT.

Staff recommends APPROVAL of the CONDITIONAL USE PERMIT to allow a MEDICAL CLINIC subject to the following conditions:

1. Council approval of the corresponding Variance, Site Plan, and Plat applications.

Staff recommends APPROVAL of the CONDITIONAL USE PERMIT to allow a DRIVE-THROUGH LANE subject to the following conditions:

2. Council approval of the corresponding Variance, Site Plan, and Plat applications.
3. The Drive-through lane must adhere to the requirements outlined in 153.156(D) of the Zoning Ordinance.

Staff recommends APPROVAL of the CONDITIONAL USE PERMIT to allow OUTDOOR SEATING subject to the following conditions:

1. Council approval of the corresponding Site Plan and Plat applications.

2. The outdoor seating area must meet the provisions as outlined in Section 153.156(G).

Staff recommends APPROVAL of the PRELIMINARY/FINAL PLAT subject to the following conditions:

1. Council approval of the corresponding Variance, Site Plan, and Conditional Use Permit applications.
2. The plat shall be recorded at the County Recorder Office prior to application of a building permit.
3. Provide documentation for proposed private easements as required per the Site Plan approval.
4. The Plat shall adhere to the recommendations as outlined by the City Engineer and MnDOT per their submitted memos.

CITY OF WEST ST. PAUL

1616 HUMBOLDT AVENUE, WEST ST. PAUL, MN 55118-3972

MUNICIPAL CENTER 651-552-4100 POLICE 651-552-4200
PARKS/RECREATION 651-552-4150 FIRE 651-552-4176
FAX 651-552-4190 TDD 651-552-4222

SITE PLAN APPLICATION

Filing Fee: $275.00

Escrow Amount: $1300.00

TOTAL FEES 1,575.00

(OFFICE USE ONLY)

CASE NO. 16-06
DATE RECEIVED 4/22/16
RECEIPT # _____
60 DAY DATE 6/21/16

1. STREET ADDRESS OF PARCEL 1685, 1701 and 1725 Robert Street South

2. NAME OF APPLICANT Venture Pass Partners, LLC Dave Carland
Phone # 952-473-1210 Email dcarland@venturepass.net

3. ADDRESS OF APPLICANT Venture Pass Partners, LLC
19620 Waterford Ct.
Shorewood, MN 55331

4. NAME OF OWNER *See Exhibit A (attached)* Phone # _____

5. ADDRESS OF OWNER _____ Email _____

6. LEGAL/PID # existing PID's 420200054017, 426477501010, 420200054012

See Exhibit B for full legal descriptions (attached)

7. PRESENT ZONING B3

8. PROPOSED USE OF PARCELS Commercial, retail, restaurant with drive thru

9. WHAT WILL BE THE EFFECT ON EXISTING AND ANTICIPATED TRAFFIC CONDITIONS, INCLUDING PARKING FACILITIES ON ADJACENT STREETS

There will be no reliance on parking facilities on adjacent streets, all parking will be contained on the subject property as per city parking count requirements. Traffic management should be improved with this proposed development as we are eliminating multiple existing curb cuts on Robert St South, and also facilitating cross access from adjacent parcels to our north and south to the signalized full access curb cut/intersection at Lothenbach.

EXHIBITS REQUIRED

1. An electronic copy as well as four (4) 22x34 and twenty (20) 11x17 copies in sets and folded plans, showing application information as follows:
   a. A survey scaled and dimensioned site plan showing pertinent existing conditions such as parking layout, access provisions, structure locations, drainage, lot area, and yard dimensions, including but not limited to the surrounding parcels within 150 feet.

   b. A complete set of preliminary drawings prepared and signed by a registered Civil Engineer, Architect, and/or Landscape Architect showing:

      (i) A site plan indicating parking layout, access provisions, structure locations, any fences, walls, or other screening, including height and type of material, landscaping, drainage, trees and shrubbery including types and locations, and sizes.
      (ii) Building Elevations including finishes on all buildings all sides.
      (iii) All lighting provisions on site, including type, location, and lumens affecting the surrounding parcels and streets.
      (iv) Curb type and location on site.
      (v) Proposed plans for sidewalk to service, parking, recreation and service areas within the site.

ACKNOWLEDGE AND SIGNATURE

The undersigned hereby represents upon all penalties of law, for the purpose of inducing the City of West St Paul to take action herein requested, that all statements herein are true and that all work herein mentioned will be done in accordance with the Ordinances and all Codes of the City of West St Paul and the State of Minnesota.

Signature of Owner (Required)	(651) 452-2627 Phone Number
Signature of Owner (Required)	Phone Number
Signature of Owner (Required)	Phone Number
Signature of Applicant (If different)	Phone Number

NOTE: All Materials relevant to this Application must be filed on or before the dates listed on the Operating Procedures for Applicants page. The Planning Commission holds its regular meeting at 7:00pm on the third Tuesday of each month.

LAPSE OF SITE PLAN: An approved Site Plan shall lapse and become null and void six months following the date on which the Site Plan was approved, unless prior to the expiration of six months a building permit is issued by the Building Official and construction is commenced and diligently pursued toward completion on the subject site. An approved Site Plan may be renewed once for a period of one year by the City Council.

FEES

1. The fees to be paid by each applicant for each zoning request shall be as prescribed by the City Council. Fees shall be payable at the time applications are filed with the Zoning Administrator and are not refundable unless the application is withdrawn prior to being sent for legal publication and notice. There shall be no fee in the case of applications filed in the public interest by the City Council or by the Planning Commission. Fees shall include application fee, filing fees, consultant, legal, planning, and engineering fees.

2. Applicants shall deposit with the City, together with the application filing fees, the sums required by Council resolution toward prepayment of the Consultants and Attorney's expenses and all costs to be billed and charged to the City. The prepayment amounts shall be a credit toward all reasonable fees and expenses charged by the Consultants to the City in the investigation report and recommendation to the City Council concerning the application. All reasonable expenses and fees in excess of the deposit, shall be paid by the applicant to the City within 30 days of final action on the matter by the City. If not paid within 30 days, the account shall be deemed delinquent. If the fees and expenses incurred by the City from the Consultants are less than the amount of deposit, such excess shall be returned to the applicant upon final action by the City in said manner.

EXHIBITS REQUIRED

1. An electronic copy as well as four (4) 22x34 and twenty (20) 11x17 copies in sets and folded plans, showing application information as follows:
   a. A survey scaled and dimensioned site plan showing pertinent existing conditions such as parking layout, access provisions, structure locations, drainage, lot area, and yard dimensions, including but not limited to the surrounding parcels within 150 feet.

   b. A complete set of preliminary drawings prepared and signed by a registered Civil Engineer, Architect, and/or Landscape Architect showing:

      (i) A site plan indicating parking layout, access provisions, structure locations, any fences, walls, or other screening, including height and type of material, landscaping, drainage, trees and shrubbery including types and locations, and sizes.
      (ii) Building Elevations including finishes on all buildings all sides.
      (iii) All lighting provisions on site, including type, location, and lumens affecting the surrounding parcels and streets.
      (iv) Curb type and location on site.
      (v) Proposed plans for sidewalk to service, parking, recreation and service areas within the site.

ACKNOWLEDGE AND SIGNATURE

The undersigned hereby represents upon all penalties of law, for the purpose of inducing the City of West St Paul to take action herein requested, that all statements herein are true and that all work herein mentioned will be done in accordance with the Ordinances and all Codes of the City of West St Paul and the State of Minnesota.

Signature of Owner (Required)	651-747-8917 Phone Number
Signature of Owner (Required)	Phone Number
Signature of Owner (Required)	Phone Number
Signature of Applicant (If different)	Phone Number

NOTE: All Materials relevant to this Application must be filed on or before the dates listed on the Operating Procedures for Applicants page. The Planning Commission holds its regular meeting at 7:00pm on the third Tuesday of each month.

LAPSE OF SITE PLAN: An approved Site Plan shall lapse and become null and void six months following the date on which the Site Plan was approved, unless prior to the expiration of six months a building permit is issued by the Building Official and construction is commenced and diligently pursued toward completion on the subject site. An approved Site Plan may be renewed once for a period of one year by the City Council.

FEES

1. The fees to be paid by each applicant for each zoning request shall be as prescribed by the City Council. Fees shall be payable at the time applications are filed with the Zoning Administrator and are not refundable unless the application is withdrawn prior to being sent for legal publication and notice. There shall be no fee in the case of applications filed in the public interest by the City Council or by the Planning Commission. Fees shall include application fee, filing fees, consultant, legal, planning, and engineering fees.

2. Applicants shall deposit with the City, together with the application filing fees, the sums required by Council resolution toward prepayment of the Consultants and Attorney's expenses and all costs to be billed and charged to the City. The prepayment amounts shall be a credit toward all reasonable fees and expenses charged by the Consultants to the City in the investigation report and recommendation to the City Council concerning the application. All reasonable expenses and fees in excess of the deposit, shall be paid by the applicant to the City within 30 days of final action on the matter by the City. If not paid within 30 days, the account shall be deemed delinquent. If the fees and expenses incurred by the City from the Consultants are less than the amount of deposit, such excess shall be returned to the applicant upon final action by the City in said manner.

EXHIBITS REQUIRED

A. An electronic copy as well as four (4) 22x34 and twenty (20) 11x17 paper copies, of a map or plat showing the property on which the Conditional Use Permit is requested, and all parcel within 150 feet of the boundaries of the subject parcel.

B. An electronic copy as well as four (4) 22x34 and twenty (20) 11x17 paper copies in sets and folded plans, showing application information as follows:
   a. Proposed and existing topography and drainage.
   b. A complete plan prepared and signed by a registered Civil Engineer, Architect, and/or Landscape Architect showing:
      i. The parking layout, access provisions, structure locations, landscaping, drainage, trees and shrubbery including types and locations, and sizes.
      ii. Any fences, walls, or other screening, including height and type of material.
      iii. All lighting provisions, including type, location, and lumens affecting the surrounding parcels and streets.
      iv. Curb type and location on site.
      v. Proposed plans for sidewalk to service, parking, recreation and service areas within the site.

ACKNOWLEDGE AND SIGNATURE

The undersigned hereby represents upon all penalties of law, for the purpose of inducing the City of West St Paul to take action herein requested, that all statements herein are true and that all work herein mentioned will be done in accordance with the Ordinances and all Codes of the City of West St Paul and the State of Minnesota.

Signature of Owner (Required)	650-445-7578 Phone Number
Signature of Owner (Required)	Phone Number
Signature of Owner (Required)	Phone Number
Signature of Applicant (If different)	Phone Number

NOTE: All Materials relevant to this Application must be filed on or before the dates listed on Operating Procedures for Applicants page. The Planning Commission holds its regular meeting at 7:00pm on the third Tuesday of each month.

CITY OF WEST ST. PAUL

1616 HUMBOLDT AVENUE, WEST ST. PAUL, MN 55118-3972

MUNICIPAL CENTER 651-552-4100 POLICE 651-552-4200
PARKS/RECREATION 651-552-4150 FIRE 651-552-4176
FAX 651-552-4190 TDD 651-552-4222

CONDITIONAL USE PERMIT APPLICATION

Filing Fee: $275.00

Escrow Amount: $400.00 (residential)
$800.00 (commercial)

TOTAL FEES 1,075 00

(OFFICE USE ONLY)

CASE NO. 16-06
DATE RECEIVED 4/22/16
RECEIPT #
60 DAY DATE 6/21/16

---

1. STREET ADDRESS OF PARCEL 1685, 1701 and 1725 Robert Street South

2. NAME OF APPLICANT Venture Pass Partners, LLC Dave Carland
Phone # 952-473-1210 Email dcarland@venturepass.net

3. ADDRESS OF APPLICANT Venture Pass Partners, LLC
19620 Waterford Ct.
Shorewood, MN 55331

4. NAME OF OWNER ***See Exhibit A (attached)*** Phone # _____

5. ADDRESS OF OWNER _____ Email _____

6. LEGAL/PID # existing PID's 420200054017, 426477501010, 420200054012

See Exhibit B for full legal descriptions (attached)

7. PRESENT ZONING B3

8. PROPOSED USE OF PARCELS 1) Commercial Medical Office, 2) Retail/Restaurant strip with outdoor patio seating, 3) Restaurant with drive thru

9. ZONING SECTION AUTHORIZING CUP 21.2 (9)

10. WHAT WILL BE THE EFFECT OF THE PROPOSED USE ON THE HEALTH, SAFETY, & WELFARE OF THE OCCUPANTS IN THE SURROUNDING PARCELS?_No adverse affect.

11. WHAT WILL BE THE EFFECT ON EXISTING AND ANTICIPATED TRAFFIC CONDITIONS, INCLUDING PARKING FACILITIES ON ADJACENT STREETS? No impact to or reliance on parking on adjacent streets. We are proposing to eliminate multiple curb cuts to Robert St, consolidating to two curb cuts, so this should be beneficial to traffic patterns.
12. WHAT WILL BE THE EFFECT OF THE PROPOSED USE ON THE COMPREHENSIVE PLAN? Consistent with Comprehensive Plan.

EXHIBITS REQUIRED

A. An electronic copy as well as four (4) 22x34 and twenty (20) 11x17 paper copies, of a map or plat showing the property on which the Conditional Use Permit is requested, and all parcel within 150 feet of the boundaries of the subject parcel.

B. An electronic copy as well as four (4) 22x34 and twenty (20) 11x17 paper copies in sets and folded plans, showing application information as follows:
   a. Proposed and existing topography and drainage.
   b. A complete plan prepared and signed by a registered Civil Engineer, Architect, and/or Landscape Architect showing:
      i. The parking layout, access provisions, structure locations, landscaping, drainage, trees and shrubbery including types and locations, and sizes.
      ii. Any fences, walls, or other screening, including height and type of material.
      iii. All lighting provisions, including type, location, and lumens affecting the surrounding parcels and streets.
      iv. Curb type and location on site.
      v. Proposed plans for sidewalk to service, parking, recreation and service areas within the site.

ACKNOWLEDGE AND SIGNATURE

The undersigned hereby represents upon all penalties of law, for the purpose of inducing the City of West St Paul to take action herein requested, that all statements herein are true and that all work herein mentioned will be done in accordance with the Ordinances and all Codes of the City of West St Paul and the State of Minnesota.

Signature of Owner (Required)	(651) 452-2627 Phone Number
Signature of Owner (Required)	Phone Number
Signature of Owner (Required)	Phone Number
Signature of Applicant (If different)	Phone Number

NOTE: All Materials relevant to this Application must be filed on or before the dates listed on <u>Operating Procedures for Applicants</u> page. The Planning Commission holds its regular meeting at 7:00pm on the third Tuesday of each month.

EXHIBITS REQUIRED

A. An electronic copy as well as four (4) 22x34 and twenty (20) 11x17 paper copies, of a map or plat showing the property on which the Conditional Use Permit is requested, and all parcel within 150 feet of the boundaries of the subject parcel.

B. An electronic copy as well as four (4) 22x34 and twenty (20) 11x17 paper copies in sets and folded plans, showing application information as follows:
   a. Proposed and existing topography and drainage.
   b. A complete plan prepared and signed by a registered Civil Engineer, Architect, and/or Landscape Architect showing:
      i. The parking layout, access provisions, structure locations, landscaping, drainage, trees and shrubbery including types and locations, and sizes.
      ii. Any fences, walls, or other screening, including height and type of material.
      iii. All lighting provisions, including type, location, and lumens affecting the surrounding parcels and streets.
      iv. Curb type and location on site.
      v. Proposed plans for sidewalk to service, parking, recreation and service areas within the site.

ACKNOWLEDGE AND SIGNATURE

The undersigned hereby represents upon all penalties of law, for the purpose of inducing the City of West St Paul to take action herein requested, that all statements herein are true and that all work herein mentioned will be done in accordance with the Ordinances and all Codes of the City of West St Paul and the State of Minnesota.

Signature of Owner (Required)	651-747-8917 Phone Number
Signature of Owner (Required)	Phone Number
Signature of Owner (Required)	Phone Number
Signature of Applicant (If different)	Phone Number

NOTE: All Materials relevant to this Application must be filed on or before the dates listed on Operating Procedures for Applicants page. The Planning Commission holds its regular meeting at 7:00pm on the third Tuesday of each month.

EXHIBITS REQUIRED

1. An electronic copy as well as four (4) 22x34 and twenty (20) 11x17 copies in sets and folded plans, showing application information as follows:
   a. A survey scaled and dimensioned site plan showing pertinent existing conditions such as parking layout, access provisions, structure locations, drainage, lot area, and yard dimensions, including but not limited to the surrounding parcels within 150 feet.

   b. A complete set of preliminary drawings prepared and signed by a registered Civil Engineer, Architect, and/or Landscape Architect showing:

      (i) A site plan indicating parking layout, access provisions, structure locations, any fences, walls, or other screening, including height and type of material, landscaping, drainage, trees and shrubbery including types and locations, and sizes.
      (ii) Building Elevations including finishes on all buildings all sides.
      (iii) All lighting provisions on site, including type, location, and lumens affecting the surrounding parcels and streets.
      (iv) Curb type and location on site.
      (v) Proposed plans for sidewalk to service, parking, recreation and service areas within the site.

ACKNOWLEDGE AND SIGNATURE

The undersigned hereby represents upon all penalties of law, for the purpose of inducing the City of West St Paul to take action herein requested, that all statements herein are true and that all work herein mentioned will be done in accordance with the Ordinances and all Codes of the City of West St Paul and the State of Minnesota.

Signature of Owner (Required)	650-445-7578 Phone Number
Signature of Owner (Required)	Phone Number
Signature of Owner (Required)	Phone Number
Signature of Applicant (If different)	Phone Number

NOTE: All Materials relevant to this Application must be filed on or before the dates listed on the Operating Procedures for Applicants page. The Planning Commission holds its regular meeting at 7:00pm on the third Tuesday of each month.

LAPSE OF SITE PLAN: An approved Site Plan shall lapse and become null and void six months following the date on which the Site Plan was approved, unless prior to the expiration of six months a building permit is issued by the Building Official and construction is commenced and diligently pursued toward completion on the subject site. An approved Site Plan may be renewed once for a period of one year by the City Council.

FEES

1. The fees to be paid by each applicant for each zoning request shall be as prescribed by the City Council. Fees shall be payable at the time applications are filed with the Zoning Administrator and are not refundable unless the application is withdrawn prior to being sent for legal publication and notice. There shall be no fee in the case of applications filed in the public interest by the City Council or by the Planning Commission. Fees shall include application fee, filing fees, consultant, legal, planning, and engineering fees.

2. Applicants shall deposit with the City, together with the application filing fees, the sums required by Council resolution toward prepayment of the Consultants and Attorney's expenses and all costs to be billed and charged to the City. The prepayment amounts shall be a credit toward all reasonable fees and expenses charged by the Consultants to the City in the investigation report and recommendation to the City Council concerning the application. All reasonable expenses and fees in excess of the deposit, shall be paid by the applicant to the City within 30 days of final action on the matter by the City. If not paid within 30 days, the account shall be deemed delinquent. If the fees and expenses incurred by the City from the Consultants are less than the amount of deposit, such excess shall be returned to the applicant upon final action by the City in said manner.

LAPSE OF CONDITIONAL USE PERMIT:
An approved Conditional Use Permit shall lapse and become null and void six months following the date on which the Conditional Use Permit was approved, unless prior to the expiration of six months a building permit is issued by the Building Official and construction is commenced and diligently pursued toward completion on the subject site, or a Certificate of Occupancy is issued by the Building Official. A Conditional Use Permit may be renewed once for a period of one year by the City Council.

FEES

1. The fees to be paid by each applicant for each zoning request shall be as prescribed by the City Council. Fees shall be payable at the time applications are filed with the Zoning Administrator and are not refundable unless the application is withdrawn prior to being sent for legal publication and notice. There shall be no fee in the case of applications filed in the public interest by the City Council or by the Planning Commission. Fees shall include application fee, filing fees, consultant, legal, planning, and engineering fees.
2. Applicants shall deposit with the City, together with the application filing fees, the sums required by Council resolution toward prepayment of the Consultants and Attorney's expenses and all costs to be billed and charged to the City. The prepayment amounts shall be a credit toward all reasonable fees and expenses charged by the Consultants to the City in the investigation report and recommendation to the City Council concerning the application. All reasonable expenses and fees in excess of the deposit, shall be paid by the applicant to the City within 30 days of final action on the matter by the City. If not paid within 30 days, the account shall be deemed delinquent. If the fees and expenses incurred by the City from the Consultants are less than the amount of deposit, such excess shall be returned to the applicant upon final action by the City in said manner.

CITY OF WEST ST. PAUL

1616 HUMBOLDT AVENUE, WEST ST. PAUL, MN 55118-3972

MUNICIPAL CENTER 651-552-4100 POLICE 651-552-4200
PARKS/RECREATION 651-552-4150 FIRE 651-552-4176
FAX 651-552-4190 TDD 651-552-4222

PLATTING APPLICATION

Filing Fee: $275.00 + $2 each lot

Required Escrow: $600.00 (1-2 Lots)
$1600.00 (3 or more Lots)

TOTAL FEES 1,881.00

(OFFICE USE ONLY)

CASE NO. 16-06
DATE RECEIVED 4/22/16
RECEIPT #
60 DAY DATE 6/21/16

CONTACT INFORMATION

1. STREET ADDRESS OF PARCEL 1685, 1701 and 1725 Robert Street South

2. NAME OF APPLICANT Venture Pass Partners, LLC Dave Carland
Phone # 952-473-1210 Email dcarland@venturepass.net

3. ADDRESS OF APPLICANT Venture Pass Partners, LLC
19620 Waterford Ct.
Shorewood, MN 55331

4. NAME OF OWNER ***See Exhibit A (attached)*** Phone # _____

5. ADDRESS OF OWNER _____ Email _____
_____

6. NAME OF SURVEYOR Rick M. Blom, LS (Sambatek) Phone # (763) 476-6010

7. ADDRESS OF SURVEYOR 12800 Whitewater Dr Ste 300 Email *rblom@sambatek.com*

Minnetonka, MN 55343

8. NAME OF ENGINEER Mike Bultman (Sambatek) Phone # (763) 476-6010

9. ADDRESS OF ENGINEER 12800 Whitewater Dr Ste 300 Email *mbultman@sambatek.com*

Minnetonka, MN 55343

PLAT INFORMATION

10. LEGAL/PID # OF PROPERTY INVOLVED **See Exhibit B attached**

11. TOTAL ACREAGE **3.789 AC** 12. NUMBER OF PROPOSED LOTS **3**

13. PROPOSED NAME OF PLAT **ROBERT STREET RILEY ADDITION**

EXHIBITS REQUIRED

1. An electronic copy as well as four (4) 22x34 and twenty (20) 11x17 copies of the proposed plat/final plat in sets.

2. Plat meets all minimum subdivision requirements. If not, explain:

_____

_____

_____

ACKNOWLEDGE AND SIGNATURE

The undersigned hereby represents upon all penalties of law, for the purpose of inducing the City of West St Paul to take action herein requested, that all statements herein are true and that all work herein mentioned will be done in accordance with the Ordinances and all Codes of the City of West St Paul and the State of Minnesota.

Signature of Owner (required)	(651) 452-2627 Phone Number
Signature of Owner (required)	Phone Number
Signature of Owner (required)	Phone Number
Signature or Applicant (if different)	Phone Number

NOTE: All Materials relevant to this Application must be filed on or before the dates listed on the Operating Procedures for Applicants page. The Planning Commission holds its regular meeting at 7:00pm on the third Tuesday of each month.

LAPSE OF PLAT: An approved Plat shall lapse and become null and void six months following the date on which the Plat was approved, unless prior to the expiration of six months the Plat is recorded at Dakota County

FEES

1. The fees to be paid by each applicant for each zoning request shall be as prescribed by the City Council. Fees shall be payable at the time applications are filed with the Zoning Administrator and are not refundable unless the application is withdrawn prior to being sent for legal publication and notice. There shall be no fee in the case of applications filed in the public interest by the City Council or by the Planning Commission. Fees shall include application fee, filing fees, consultant, legal, planning, and engineering fees.

2. Applicants shall deposit with the City, together with the application filing fees, the sums required by Council resolution toward prepayment of the Consultants and Attorney's expenses and all costs to be billed and charged to the City. The prepayment amounts shall be a credit toward all reasonable fees and expenses charged by the Consultants to the City in the investigation report and recommendation to the City Council concerning the application. All reasonable expenses and fees in excess of the deposit, shall be paid by the applicant to the City within 30 days of final action on the matter by the City. If not paid within 30 days, the account shall be deemed delinquent. If the fees and expenses incurred by the City from the Consultants are less than the amount of deposit, such excess shall be returned to the applicant upon final action by the City in said manner.

EXHIBITS REQUIRED

1. An electronic copy as well as four (4) 22x34 and twenty (20) 11x17 copies of the proposed plat/final plat in sets.

2. Plat meets all minimum subdivision requirements. If not, explain:

_____

_____

_____

ACKNOWLEDGE AND SIGNATURE

The undersigned hereby represents upon all penalties of law, for the purpose of inducing the City of West St Paul to take action herein requested, that all statements herein are true and that all work herein mentioned will be done in accordance with the Ordinances and all Codes of the City of West St Paul and the State of Minnesota.

Signature of Owner (required)	651-747-8917 Phone Number
Signature of Owner (required)	Phone Number
Signature of Owner (required)	Phone Number
Signature or Applicant (if different)	Phone Number

NOTE: All Materials relevant to this Application must be filed on or before the dates listed on the Operating Procedures for Applicants page. The Planning Commission holds its regular meeting at 7:00pm on the third Tuesday of each month.

LAPSE OF PLAT: An approved Plat shall lapse and become null and void six months following the date on which the Plat was approved, unless prior to the expiration of six months the Plat is recorded at Dakota County

FEES

1. The fees to be paid by each applicant for each zoning request shall be as prescribed by the City Council. Fees shall be payable at the time applications are filed with the Zoning Administrator and are not refundable unless the application is withdrawn prior to being sent for legal publication and notice. There shall be no fee in the case of applications filed in the public interest by the City Council or by the Planning Commission. Fees shall include application fee, filing fees, consultant, legal, planning, and engineering fees.

2. Applicants shall deposit with the City, together with the application filing fees, the sums required by Council resolution toward prepayment of the Consultants and Attorney's expenses and all costs to be billed and charged to the City. The prepayment amounts shall be a credit toward all reasonable fees and expenses charged by the Consultants to the City in the investigation report and recommendation to the City Council concerning the application. All reasonable expenses and fees in excess of the deposit, shall be paid by the applicant to the City within 30 days of final action on the matter by the City. If not paid within 30 days, the account shall be deemed delinquent. If the fees and expenses incurred by the City from the Consultants are less than the amount of deposit, such excess shall be returned to the applicant upon final action by the City in said manner.

EXHIBITS REQUIRED

1. An electronic copy as well as four (4) 22x34 and twenty (20) 11x17 copies of the proposed plat/final plat in sets.

2. Plat meets all minimum subdivision requirements. If not, explain:

_____

_____

_____

ACKNOWLEDGE AND SIGNATURE

The undersigned hereby represents upon all penalties of law, for the purpose of inducing the City of West St Paul to take action herein requested, that all statements herein are true and that all work herein mentioned will be done in accordance with the Ordinances and all Codes of the City of West St Paul and the State of Minnesota.

Signature of Owner (required)	650-445-7578 Phone Number
Signature of Owner (required)	Phone Number
Signature of Owner (required)	Phone Number
Signature or Applicant (if different)	Phone Number

NOTE: All Materials relevant to this Application must be filed on or before the dates listed on the Operating Procedures for Applicants page. The Planning Commission holds its regular meeting at 7:00pm on the third Tuesday of each month.

LAPSE OF PLAT: An approved Plat shall lapse and become null and void six months following the date on which the Plat was approved, unless prior to the expiration of six months the Plat is recorded at Dakota County

FEES

1. The fees to be paid by each applicant for each zoning request shall be as prescribed by the City Council. Fees shall be payable at the time applications are filed with the Zoning Administrator and are not refundable unless the application is withdrawn prior to being sent for legal publication and notice. There shall be no fee in the case of applications filed in the public interest by the City Council or by the Planning Commission. Fees shall include application fee, filing fees, consultant, legal, planning, and engineering fees.

2. Applicants shall deposit with the City, together with the application filing fees, the sums required by Council resolution toward prepayment of the Consultants and Attorney's expenses and all costs to be billed and charged to the City. The prepayment amounts shall be a credit toward all reasonable fees and expenses charged by the Consultants to the City in the investigation report and recommendation to the City Council concerning the application. All reasonable expenses and fees in excess of the deposit, shall be paid by the applicant to the City within 30 days of final action on the matter by the City. If not paid within 30 days, the account shall be deemed delinquent. If the fees and expenses incurred by the City from the Consultants are less than the amount of deposit, such excess shall be returned to the applicant upon final action by the City in said manner.

EXHIBIT A
EXISTING PROPERTY OWNER INFORMATION

1685 Robert Street South: pid 420200054017
Sharepoint Credit Union

Riley Family Investments, LLP
Jonathon P. Riley
2320 Lexington Avenue South
Mendota Heights, MN 55120
jonriley@condormgt.com
(651) 452-2627

1701 Robert Street South: pid 426477501010
Sonic

The Benjamin and Denise Gage Trust
1805 Willow Road
Hillsbourough, CA 94010-6356
Atten: Daniel Gage
1246 El Camino Real #12
Burlingame, CA 94010
danielpgage@gmail.com
(650) 445-7578

1725 Robert Street South: pid 420200054012
Ideal Credit Union

Ideal Credit Union
8499 Tamarack Road
Woodbury, MN 55125
Atten: Jeanine Swanson
jswanson@idealcu.com
(651) 747-8917

Exhibit B

420200054017 1685 ROBERT ST S

The East 280 feet of the North 133.19 feet of the North 266.38 feet of the South 466.38 feet of the North 1416.26 feet of the East 477 feet of the West One-Half of the Southwest One-Quarter of Section 20, Township 28, Range 22, except the East 40 feet taken for Robert Street.

Dakota County, Minnesota

426477501010 1701 ROBERT ST S

Lot 1, Block 1, Robert Street Sonic Addition, Dakota County, Minnesota.

420200054012 1725 ROBERT ST S

Description from title commitment:

South 200 feet of North 1416.26 feet of East 477 feet of the West Half of the Southwest Quarter of Section Twenty (20), Township Twenty Eight (28), Range Twenty Two (22), Dakota County, Minnesota, EXCEPTING therefrom the West 12 feet thereof;

AND

EXCEPTING that part thereof lying Easterly of Line 1 described below:

Line 1:

From a point on the East line of the West Half of the Southwest Quarter of said Section 20, distant 1277.56 feet South of the Northeast corner thereof, run Westerly at right angles to the East line of said West Half of the Southwest Quarter to an intersection with the Westerly right of way line of said Trunk Highway No. 52 which is the point of beginning of Line 1 to be described; thence run Southwesterly to a point distant 60 feet Westerly (Measured at right angles) of a point on the East line of said West Half of the Southwest Quarter, distant 1292.56 feet South of the Northeast corner of said West Half of the Southwest Quarter; thence run Southerly parallel with the East line of said West Half of the Southwest Quarter for 45 feet; thence run Southeasterly to the point of intersection of the Westerly right of way line of said Trunk Highway No. 52 with a line run Westerly at right angles to the East line of said West Half of the Southwest Quarter from a point thereon distant 1357.56 feet South of the Northeast corner of said West Half of the Southwest Quarter and there terminating, according to the Government Survey thereof.

Dakota County, Minnesota

City of West St. Paul
PUBLIC WORKS & PARKS/ENG

Memorandum

TO: Ben Boike, Assistant Community Development Director/City Planner

FROM: Darin Rezac, Civil Engineer

DATE: May 11, 2016

SUBJECT: Preliminary Plat & Site Review Lothenbach/Robert St Commercial Redevelopment

---

The engineering department has completed its review of the above-referenced project. In conjunction with the site plan approval, the following conditions must be met.

RECOMMENDED CONDITIONS OF APPROVAL

1. Permits from the appropriate regulatory agencies must be obtained, including but not limited to the MPCA, Dakota County, MnDOT, etc.
2. Parkland dedication shall be paid upon application of a building permit. Fee shall be in accordance to City Ordinance, Section 1022.11.
3. Provide documentation for proposed private easements.
4. Add 10' drainage and utility easement where proposed plat abuts the public right-of-way. Add 5' drainage and utility easement around interior property lines.
5. Provide a traffic study showing the functionality and operability of the Lothenbach & Robert St. intersection with the proposed commercial land uses.
6. On all plan view sheets, update geometric and utility (drainage) files to show proposed Robert St. Improvement Project. (electronic files to be provided by WSP Engineering Dept.).
7. Provide detailed plans and specifications for retaining walls over 4 feet in height signed by a Minnesota Professional Structural Engineer.
8. On sheet C5.01 and C5.02, move inlet protection symbols to the location of the proposed catch basins along Robert St.
9. On sheets C5.03 and C7.01;
    a. Replace generic standard detail plates with WSP city plates (electronic files to be provided by WSP Engineering Dept.).

b. Add any applicable Mn/DOT or Saint Paul Regional Water Services (SPRWS) standard details.

10. On sheet C6.01;
    a. Change storm sewer pipe material to Reinforced Concrete Pipe (RCP CL V) in any areas beneath a roadway or paved surface. For areas outside roadway, the City will allow HDPE pipe. Minimum pipe size is 12".
    b. Cleanouts are required every 100' on sanitary sewer lines. Show these cleanouts on the plans.
    c. Include language referring to City Standards for design standards and specifications.
11. On sheet L1.01, update plan view to include the landscaping portion of the Robert St. Improvement Project (electronic files to be provided by WSP Engineering Dept.).
12. Address any and all issues set forth by Mn/DOT review dated May 11, 2016 titled **Robert St. Riley Addition Mn/DOT Review #P16-017.**

C: Ross Beckwith, City Engineer/Public Works & Parks Director
Chuck Price, Engineering Tech III

SOUTH METRO FIRE

1650 HUMBOLDT AVENUE • WEST ST. PAUL, MN • 55118
TELEPHONE: (651) 552-4176 • FAX: (651) 552-4195
www.southmetrofire.com

"PROUDLY SERVING THE CITIES OF SOUTH ST. PAUL AND WEST ST. PAUL"

TO: **PLANNING COMMISSION MEMBERS**
FROM: **LINDA MCMILLAN**
FIRE MARSHAL
DATE: **5/11/2016**
SUBJECT: **CASE NUMBER 16-06**
Lothenbach / Robert St. Commercial Redevelopment

In reference to the proposed construction of the Lothenbach / Robert St. Commercial Redevelopment please note the following:

a. A 50' outside turning radius is required for all access roads. MSFC 503.2.4.

b. The grade of the access road shall be less than 8%. MSFC 503.2.7.

Minnesota Department of Transportation
Metropolitan District
Waters Edge Building
1500 County Road B2 West
Roseville, MN 55113

May 11, 2016

Ben Boike, Zoning Administrator
City of West St. Paul
1616 Humboldt Ave
West St. Paul, MN 55118

SUBJECT: **Robert St. Riley Addition Mn/DOT Review #P16-017**
NE quad of MN3(US952A/Robert St) and Lothenbach Ave
West St. Paul, Dakota County
Control Section 1908

Dear Mr. Boike:

The Minnesota Department of Transportation (MnDOT) has reviewed the above referenced plat in compliance with Minnesota Statute 505.03, subdivision 2, Plats. Before any further development, please address the following issues:

Right of way

1. This is considered Trunk Highway 952A. This label should be added to the plan sheets and also the Plat.
2. Looking at the information on our right-of-way maps, this right-of-way was originally acquired by Dakota County on 03/10/1928 by Doc. Nos. 117140 & 117141.
3. MnDOT had another acquisition for this area from Norwest Bank in 1987.
4. Confirmation is required from our Surveys Office to assure that the plat boundary matches the existing r/w.

For questions concerning these comments, please contact Matt Aguirre (651-234-7599) in MnDOT Metro District's Right-of-Way Section.

Traffic

MnDOT is concerned with the site circulation of the drive-thru. Drive-thru traffic may back up into the intersection.

For questions regarding these comments please contact Merlin Kent at 651.234.7825 or merlin.kent@state.mn.us.

Design

The building stairs and handrails need to be on private property. The handrail cannot protrude into public right of way.

For questions regarding these comments please contact Nancy Jacobson at 651.234.7647 Nancy.L.Jacobson@state.mn.us

Water Resources
A drainage permit will be required to ensure that current drainage rates to Mn/DOT right-of-way will not be increased. The drainage permit application, including the information below, should be submitted to:

Minnesota Department of Transportation
Metropolitan District - Permit Office
1500 W. County Road B-2
Roseville, MN 55113

The following information must be submitted with the drainage permit application:
1) A grading plan showing existing and proposed contours,
2) Drainage area maps for the proposed project showing existing and proposed drainage areas. Any off-site areas that drain to the project area should also be included in the drainage area maps. The direction of flow for each drainage area must be indicated by arrows,
3) Drainage computations for pre and post construction conditions during the 2, 10, 50 and 100 year rain events, and
4) An electronic copy of any computer modeling used for the drainage computations.

It also appears that new connections to our storm sewer are being made. Please verify the size of existing MnDOT catchbasins, and their capacity to handle the additional flow.

Please direct questions concerning drainage issues to Nick Olson (651-234-7542) or (nicholas.olson@state.mn.us) of Mn/DOT's Water Resources section.

Permits:
In addition to the drainage permit the access modifications will require an Access permit. Any other work impacting MNDOT R/W will require a permit. Permit forms are available from MnDOT's utility website at http://www.dot.state.mn.us/utility/ Please include one 11 x 17 plan set and one full size plan set with each permit application. Please direct any questions regarding permit requirements to Buck Craig (651-234-7911) of MnDOT's Metro Permits Section.

Review Submittal Options:
Mn/DOT's goal is to complete the review of plans within 30 days. Submittals sent in electronically can usually be turned around faster. There are four submittal options. Please submit either:

1. One (1) electronic pdf. version of the plans. Mn/DOT can accept the plans via e-mail at metrodevreviews.dot@state.mn.us provided that each separate e-mail is under 20 megabytes.
2. Three (3) sets of full size plans. Although submitting seven sets of full size plans will expedite the review process. Plans can be sent to:

   Mn/DOT – Metro District Planning Section
   Development Reviews Coordinator

1500 West County Road B-2
Roseville, MN 55113

3. One (1) compact disk.
4. Plans can also be submitted to Mn/DOT's External FTP Site. Please send files to: ftp://ftp2.dot.state.mn.us/pub/incoming/MetroWatersEdge/Planning Internet Explorer doesn't work using ftp so please use an FTP Client or your Windows Explorer (My Computer). Also, please send a note to metrodevreviews.dot@state.mn.us indicating that the plans have been submitted on the FTP site.

If you have any questions concerning this review please contact me at (651) 234-7784.

Sincerely,

Karen Scheffing
Principal Planner

Copy sent via E-Mail:
Buck Craig, Permits
Nancy Jacobson, Design
Tara McBride, Area Engineer
Bruce Irish, Water Resources
Matt Aguirre, Right-of-Way
David Sheen, Traffic
Dave Torfin, Surveys
Coleen Brown, State Aid
Russell Owen, Metropolitan Council

TO: Asst. Community Dev. Dir.
THROUGH: Asst. Parks & Recreation Dir.
FROM: Environmental Committee
DATE: May 10, 2016

SUBJECT:

CASE #16-06 – Site Plan review for the redevelopment of 1685, 1701, and 1725 Robert St.

BACKGROUND INFORMATION:

At the May 4, 2016 Environmental Committee (EC) meeting, members reviewed the Site Plan submitted by Venture Pass to redevelop and construct 20,000 sq. ft. of new retail/medical/restaurant space at the properties located at 1685-1725 Robert St. (former Sharepoint Bank, former Sonic, and Ideal Credit Union properties). The EC members liked the selection of trees and the large amount of plants and shrubs being installed. They also liked that many mature on-site trees were being saved. They agreed with the Assistant Community Development Director's recommendations. The EC unanimously voted to approve the site plan as proposed, with an additional comment that they strongly encourage the developer to use "pollinator friendly" that were not grown with "neonicotinoids".

RECOMMENDATION:

Environmental Committee members approve the site plan for redevelopment of 1685, 1701, and 1725 Robert St.

CITY OF
WEST ST. PAUL

City Hall
1616 Humboldt Avenue
West St. Paul, MN
55118-3972
651-552-4100
FAX 651-552-4190
TDD 651-322-2323
www.wspmn.gov

NOTICE OF PUBLIC HEARINGS
CITY OF WEST ST. PAUL

The listed items below will be public hearing at the City of West St. Paul Planning Commission meeting on May 17th, 2016 at 7:00 p.m. and a public hearing at the City Council meeting on May 23rd, 2016 at 6:30 p.m.:

- CASE #16-06 – Applications for a Site Plan, Plat, and Conditional Use Permits for the redevelopment of 1675, 1701 and 1725 Robert St. – Venture Pass Partners, LLC

Interested persons will be heard at these meetings. If you have any questions, please contact City Planner Ben Boike at 651-552-4134. If you need any type of accommodation to participate in the meeting, please contact the ADA Coordinator at 651-552-4102 at least 5 (five) business days prior to the meeting.

Chantal M. Doriott
City Clerk, City of West St. Paul
Published: May 8, 2016

Preliminary Site Development Plans
for

Lothenbach/Robert St. Commercial Redevelopment

West St. Paul, Minnesota

Presented by:

Robert St Investors, LLLP & Venture Pass Partners

BENCHMARKS

BM NO. 1
TOP NUT OF HYDRANT AT SOUTHEAST CORNER OF SURVEYED PROPERTY.
ELEV.=980.82

BM NO. 2
TOP NUT OF HYDRANT AT SOUTHWEST CORNER OF SURVEYED PROPERTY.
ELEV.=1001.52

CONSULTANT CONTACT LIST:

DEVELOPER/OWNER
VENTURE PASS PARTNERS, LLC
19620 WATERFORD COURT
SHOREWOOD, MN 55331
TEL 612-801-4313
CONTACT: RANDY RAUWERDINK

CIVIL ENGINEER
SAMBATEK
12800 WHITEWATER DRIVE, SUITE 300
MINNETONKA, MN 55343
TEL 763-476-6010
FAX 763-476-8532
CONTACT: MIKE BULTMAN, PE

ARCHITECT
POPE ARCHITECTS
1295 BANDANA BLVD N, SUITE 200
ST. PAUL, MN 55108-2735
TEL 651-642-9200
CONTACT: PAUL HOLMES

SURVEYOR
SAMBATEK
12800 WHITEWATER DRIVE, SUITE 300
MINNETONKA, MN 55343
TEL 763-476-6010
FAX 763-476-8532
CONTACT: RICK BLOM, LS

GEOTECHNICAL
AMERICAN ENGINEERING TESTING, INC.
550 CLEVELAND AVE N
ST. PAUL, MN 55114
TEL 651-659-9001
CONTACT: MICHAEL MCCARTHY, PE

LANDSCAPING
SAMBATEK
12800 WHITEWATER DRIVE, SUITE 300
MINNETONKA, MN 55343
TEL 763-476-6010
FAX 763-476-8532
CONTACT: JOSH MCKINNEY, PLA

VICINITY MAP
NO SCALE

SHEET INDEX

SHEET	DESCRIPTION
C1.01	TITLE SHEET
C3.01	SITE PLAN
C4.01	GRADING PLAN
C5.01	EROSION & SEDIMENT CONTROL PLAN - PHASE I
C5.02	EROSION & SEDIMENT CONTROL PLAN - PHASE II
C5.03	EROSION & SEDIMENT CONTROL DETAILS
C6.01	UTILITY PLAN
C7.01	DETAIL SHEET
L1.01	LANDSCAPE PLAN
L1.02	LANDSCAPE DETAILS

Sambatek
www.sambatek.com
12800 Whitewater Drive, Suite 300
Minnetonka, MN 55343
763.476.6010 telephone
763.476.8532 facsimile
Engineering | Surveying | Planning | Environmental

Client
ROBERT ST INVESTORS, LLLP
VENTURE PASS PARTNERS LLC A DEVELOPMENT COMPANY

Project
LOTHENBACH/ ROBERT ST COMMERCIAL REDEVELOPMENT

Location
WEST ST. PAUL, MN

Certification

I hereby certify that this plan, specification or report was prepared by me or under my direct supervision and that I am a duly licensed professional ENGINEER under the laws of the state of Minnesota.

Michael G. Bultman
Registration No. 5[illegible]0 Date: 04/22/2016

If applicable, contact us for a wet signed copy of this plan which is available upon request at Sambatek's, Minnetonka, MN office.

NOT FOR CONSTRUCTION

Summary
Designed: MGB Drawn:
Approved: Book / Page:
Phase: PRELIMINARY Initial Issue: 04/22/2016

Revision History

No.	Date	By	Submittal / Revision
	4/22/16		CITY SUBMITTAL
	5/6/16		REVISED CITY SUBMITTAL

Sheet Title
TITLE SHEET

Sheet No. Revision
C1.01

Project No. CON20491

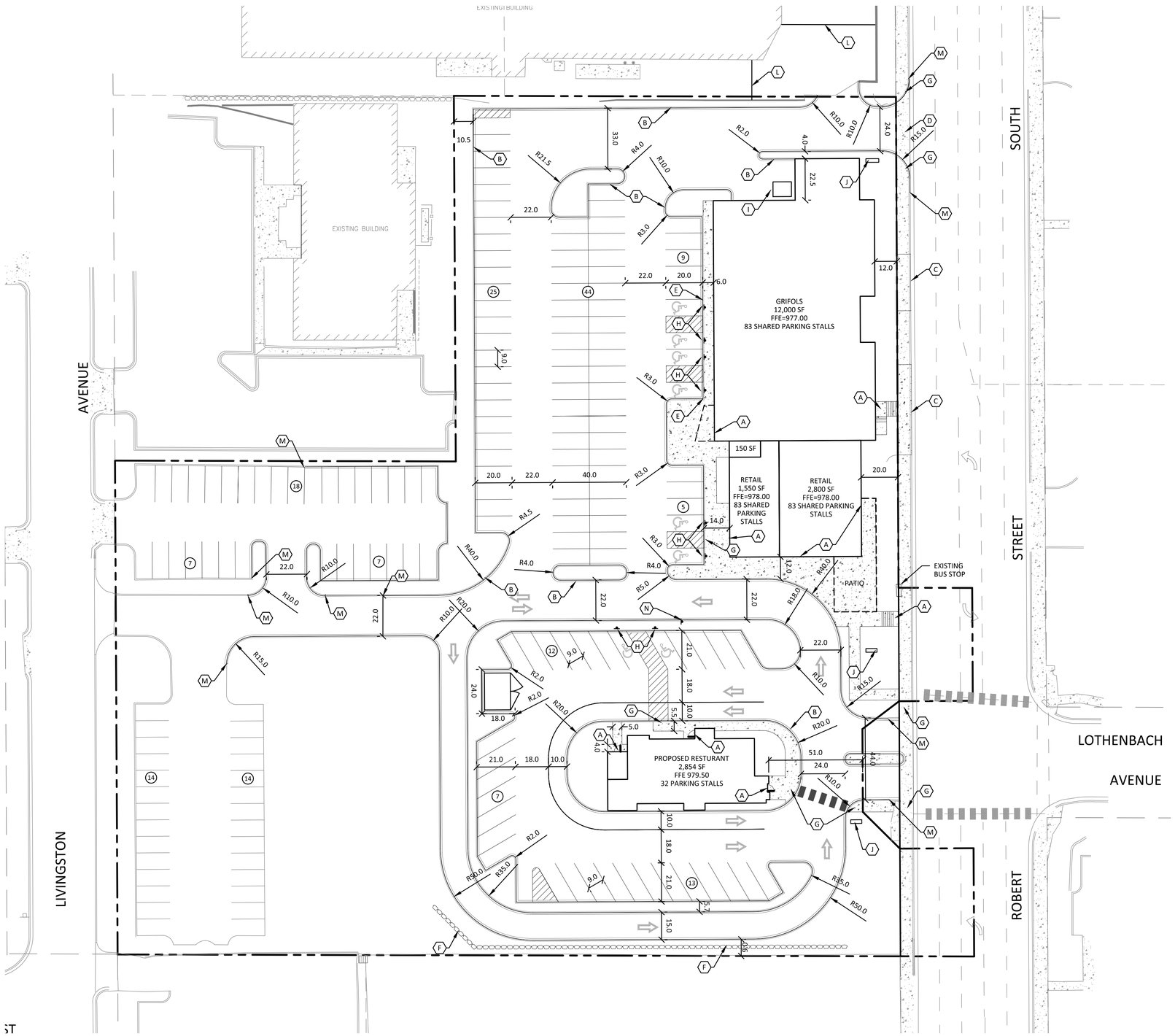

LEGEND

	PROPOSED	EXISTING		
PROPERTY LIMIT			STANDARD DUTY ASPHALT PAVING	
CURB & GUTTER			HEAVY DUTY ASPHALT PAVING	
EASEMENT			CONCRETE PAVING	
BUILDING				
RETAINING WALL				
WETLAND LIMITS		WL		
TREELINE				
SAWCUT LINE				
SIGN				
PIPE BOLLARD				
NUMBER OF PARKING STALLS PER ROW	XX			
KEY NOTE	XX			

DEVELOPMENT SUMMARY

AREA		
GROSS SITE AREA	165,066 SF	3.79 AC
LOT 1	36,371 SF	0.83 AC
LOT 2	78,666 SF	1.81 AC
LOT 3	44,929 SF	1.03 AC
BUILDING SETBACKS		
FRONT YARD		10-40 FEET
REAR YARD		20 FEET
SIDE YARD ADJACENT TO "R"		10 FEET
SIDE YARD ADJACENT TO STREET		10-30 FEET
PARKING SETBACKS		
FRONT YARD		NOT PERMITTED
REAR YARD		10 FEET
SIDE YARD ADJACENT TO "R"		10 FEET
SIDE YARD ADJACENT TO STREET		10 FEET
ZONING		
EXISTING ZONING		B-3 GENERAL BUSINESS
PROPOSED ZONING		B-3 GENERAL BUSINESS
PARKING		
LOT 1		
HC STALLS (9'x21')		2 STALLS
9'x21' STALLS		32 STALLS
LOT 2 & 3 SHARED PARKING		
HC STALLS (9'x20')		6 STALLS
9'x20' STALLS		77 STALLS
OVERFLOW PARKING		60 STALLS

DEVELOPMENT NOTES

1. ALL DIMENSIONS ARE ROUNDED TO THE NEAREST TENTH FOOT.
2. ALL DIMENSIONS SHOWN ARE TO THE FACE OF CURB UNLESS OTHERWISE NOTED.
3. CONTRACTOR SHALL REVIEW PAVEMENT GRADIENT AND CONSTRUCT "GUTTER OUT" WHERE WATER DRAINS AWAY FROM CURB. ALL OTHER AREAS SHALL BE CONSTRUCTED AS "GUTTER IN" CURB. COORDINATE WITH GRADING CONTRACTOR.
4. ALL AREAS ARE ROUNDED TO THE NEAREST SQUARE FOOT.
5. ALL PARKING STALLS TO BE 9' IN WIDTH AND 20' IN LENGTH UNLESS OTHERWISE INDICATED.
6. CONTRACTOR SHALL REFER TO ARCHITECTURAL PLANS FOR EXACT LOCATIONS AND DIMENSIONS OF EXIT PORCHES, RAMPS, PRECISE BUILDING DIMENSIONS AND EXACT BUILDING UTILITY ENTRANCE LOCATIONS.
7. SEE ARCHITECTURAL PLANS FOR MONUMENT SIGN DETAILS
8. SEE ARCHITECTURAL PLANS FOR LIGHT POLE FOUNDATION DETAIL AND FOR EXACT LOCATIONS OF LIGHT POLE.
9. REFER TO FINAL PLAT FOR LOT BOUNDARIES, LOT NUMBERS, LOT AREAS, AND LOT DIMENSIONS.
10. ALL GRADIENTS ON SIDEWALKS ALONG THE ADA ROUTE SHALL HAVE A MAXIMUM LONGITUDINAL SLOPE OF 5% (1:20), EXCEPT AT CURB RAMPS (1:12), AND A MAXIMUM CROSS SLOPE OF 2.08% (1:48). THE MAXIMUM SLOPE IN ANY DIRECTION ON AN ADA PARKING STALL OR ACCESS ISLE SHALL BE 2.08% (1:48). THE CONTRACTOR SHALL REVIEW AND VERIFY THE GRADIENT IN THE FIELD ALONG THE ADA ROUTES PRIOR TO PLACING CONCRETE OR BITUMINOUS PAVEMENT. THE CONTRACTOR SHALL NOTIFY THE ENGINEER IMMEDIATELY IF THERE IS A DISCREPANCY BETWEEN THE GRADIENT IN THE FIELD VERSUS THE DESIGN GRADIENT AND COORDINATE WITH GRADING CONTRACTOR.

KEY NOTES

A. BUILDING, STOOPS, STAIRS SEE ARCHITECTURAL PLANS
B. B-612 CONCRETE CURB AND GUTTER
C. B-618 6CONCRETE CURB AND GUTTER
D. CONCRETE APRON
E. FLAT CURB SECTION
F. SEGMENTAL BLOCK RETAINING WALL
G. ACCESSIBLE RAMP
H. ACCESSIBLE SIGNAGE
I. COMPACTOR (DESIGN BY OTHERS)
J. MONUMENT SIGN (DESIGN BY OTHERS)
K. TRASH ENCLOSURE (DESIGN BY OTHERS)
L. MEET AND MATCH EXISTING PAVEMENT SECTION
M. MEET AND MATCH EXISTING CURB
N. DO NOT ENTER SIGN

NORTH

0 30 60
SCALE IN FEET

Sambatek
www.sambatek.com
12800 Whitewater Drive, Suite 300
Minnetonka, MN 55343
763.476.6010 telephone
763.476.8532 facsimile
Engineering | Surveying | Planning | Environmental

Client
ROBERT ST INVESTORS, LLLP

VENTURE PASS PARTNERS LLC
A DEVELOPMENT COMPANY

Project
LOTHENBACH/ ROBERT ST COMMERCIAL REDEVELOPMENT

Location
WEST ST. PAUL, MN

Certification

I hereby certify that this plan, specification or report was prepared by me or under my direct supervision and that I am a duly licensed professional ENGINEER under the laws of the state of Minnesota.

Michael G. Bulfer
Registration No. 50860 Date: 04/22/2016

If applicable, this set is for a wet signed copy of this plan which is available upon request at Sambatek's, Minnetonka, MN office.

NOT FOR CONSTRUCTION

Summary

Designed: MGB Drawn:
Approved: Book / Page:
Phase: PRELIMINARY Initial Issue: 04/22/2016

Revision History

No.	Date	By	Submittal / Revision
	4/22/16		CITY SUBMITTAL
	5/6/16		REVISED CITY SUBMITTAL

Sheet Title
SITE PLAN

Sheet No. Revision
C3.01

Project No. CON20491

May 06, 2016 - 12:14pm - User:549 L:\PROJECTS\CON20491\dwg\Civil\Preliminary\20491-C301-SITE.dwg

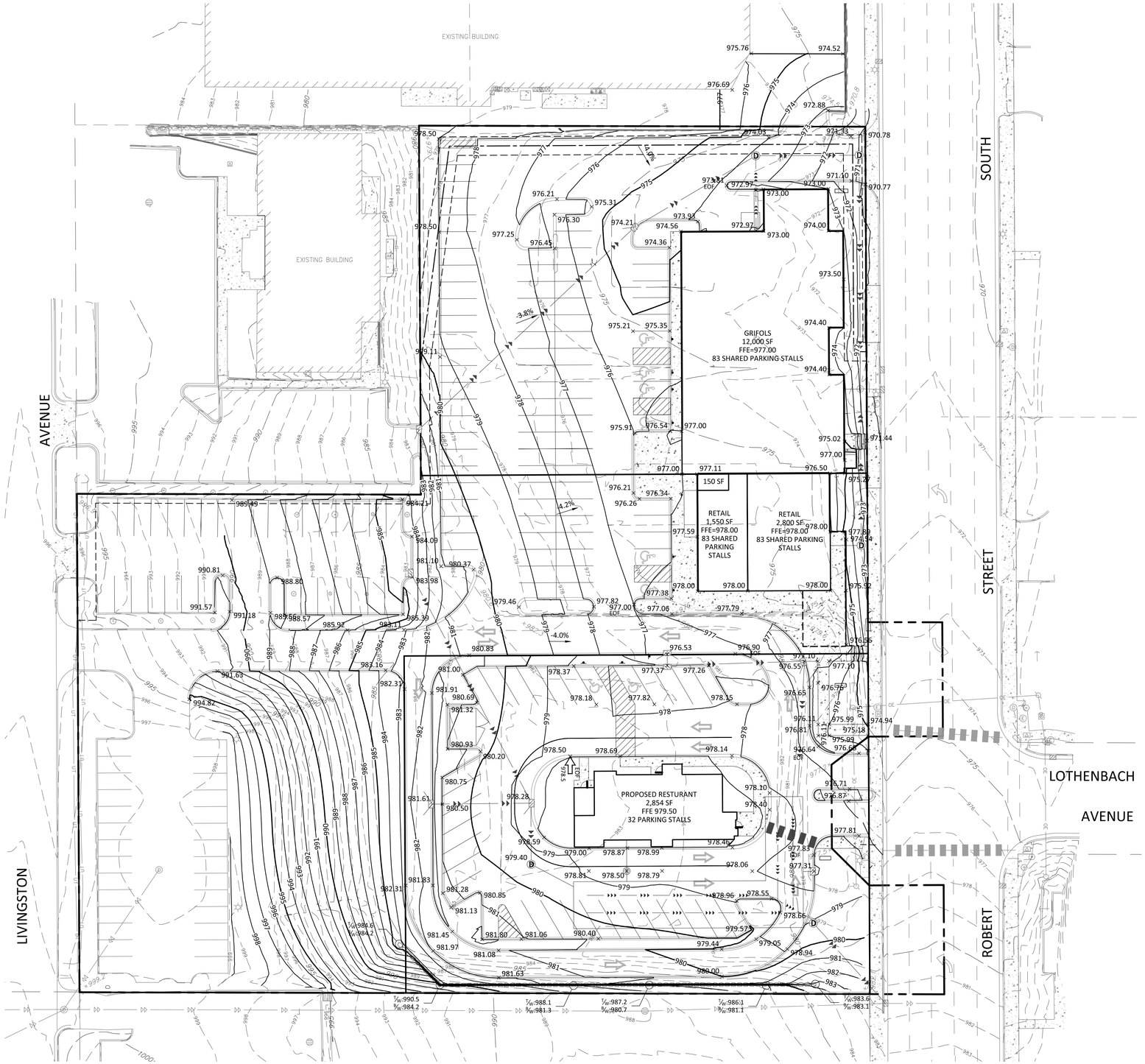

LEGEND

	PROPOSED	EXISTING
PROPERTY LIMIT		
CURB & GUTTER		
STORM SEWER	D	D
DRAINTILE		
BUILDING		
RETAINING WALL		
WETLAND LIMITS		WL
TREELINE		902.5
SPOT ELEVATION	902.5	902
CONTOUR	902	
RIP RAP		
OVERFLOW ELEV.	EOF 902.5	ST. 5 902.5
SOIL BORINGS		

GRADING NOTES

1. PROPOSED CONTOURS ARE TO FINISHED SURFACE ELEVATION. SPOT ELEVATIONS ALONG PROPOSED CURB DENOTE GUTTER GRADE.
2. ALL GRADIENT ON SIDEWALKS ALONG THE ADA ROUTE SHALL HAVE A MAXIMUM LONGITUDINAL SLOPE OF 5% (1:20), EXCEPT AT CURB RAMPS (1:12), AND A MAXIMUM CROSS SLOPE OF 2.08% (1:48). MAXIMUM SLOPE IN ANY DIRECTION ON AN ADA PARKING STALL OR ACCESS AISLE SHALL BE IN 2.08% (1:48). CONTRACTOR SHALL REVIEW AND VERIFY THE GRADIENT IN THE FIELD ALONG THE ADA ROUTES PRIOR TO PLACING CONCRETE OR BITUMINOUS. CONTRACTOR SHALL NOTIFY THE ENGINEER IMMEDIATELY IF THERE IS A DISCREPANCY BETWEEN THE GRADIENT IN THE FIELD VERSUS THE DESIGN GRADIENT. COORDINATE ALL WORK WITH PAVING CONTRACTOR.
3. COORDINATE ALL GRADING WORK ALONG ROBERT STREET WITH MNDOT.

NORTH

0 30 60
SCALE IN FEET

Sambatek
www.sambatek.com
12800 Whitewater Drive, Suite 300
Minnetonka, MN 55343
763.476.6010 telephone
763.476.8532 facsimile
Engineering | Surveying | Planning | Environmental

Client
ROBERT ST INVESTORS, LLLP

VENTURE PASS PARTNERS LLC
A DEVELOPMENT COMPANY

Project
LOTHENBACH/ ROBERT ST COMMERCIAL REDEVELOPMENT

Location
WEST ST. PAUL, MN

Certification

I hereby certify that this plan, specification or report was prepared by me or under my direct supervision and that I am a duly licensed professional ENGINEER under the laws of the state of Minnesota.

Michael G. Bulthaupt
Registration No. 50860 Date: 04/22/2016

If applicable, contact us for a wet signed copy of this plan which is available upon request at Sambatek's, Minnetonka, MN office.

NOT FOR CONSTRUCTION

Summary

Designed: MGB Drawn:
Approved: Book / Page:
Phase: PRELIMINARY Initial Issue: 04/22/2016

Revision History

No.	Date	By	Submittal / Revision
	4/22/16		CITY SUBMITTAL
	5/6/16		REVISED CITY SUBMITTAL

Sheet Title
GRADING PLAN

Sheet No. Revision
C4.01

Project No. CON20491

May 06, 2016 - 12:14pm - User:549 L:\PROJECTS\CON20491\dwg\Civil\Preliminary\20491-C401-GRADE.dwg

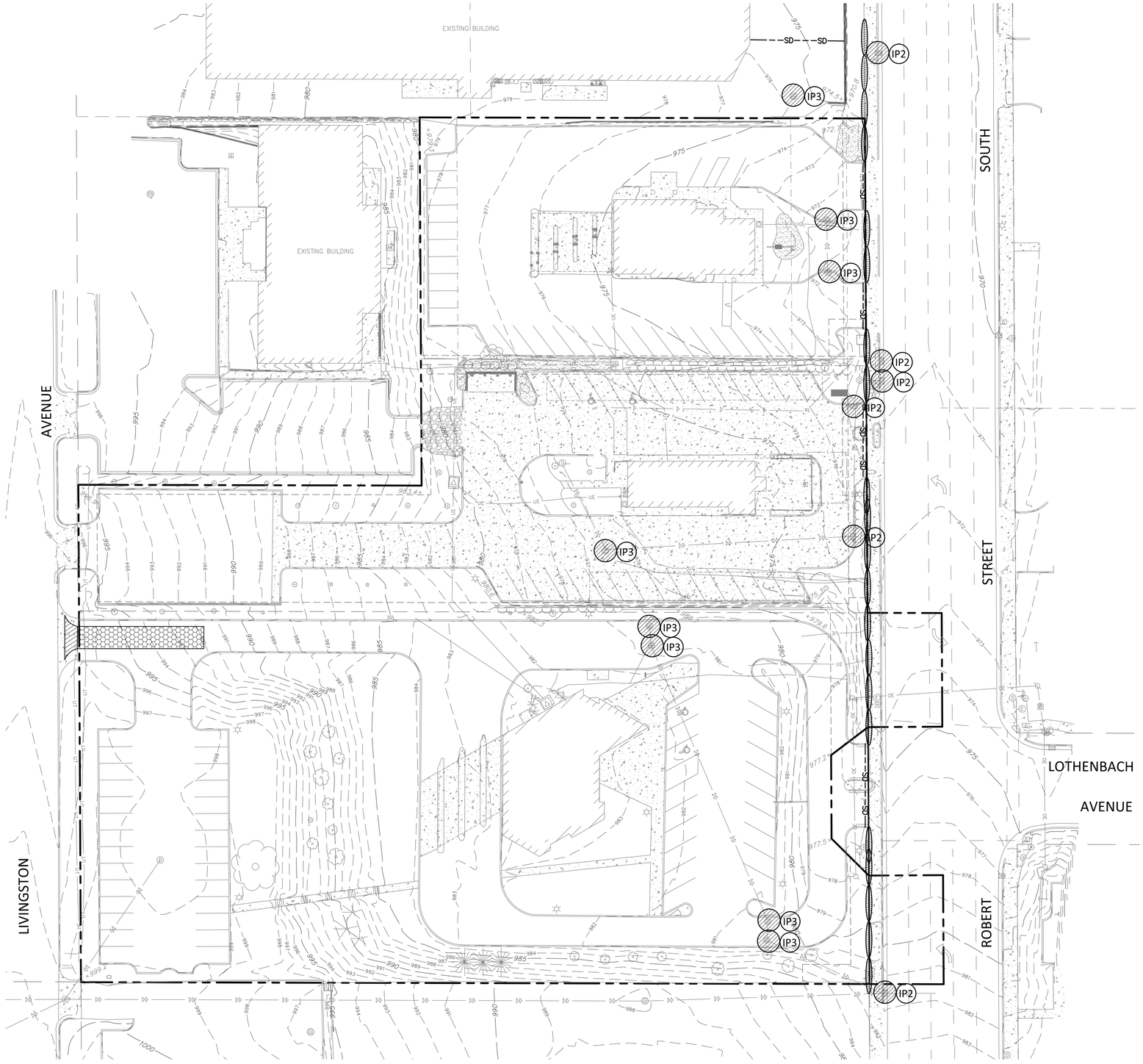

LEGEND

	PROPOSED	EXISTING
CURB & GUTTER		
STORM SEWER		
DRAINTILE		
CONTOUR	902	902
RIP RAP		
OVERFLOW ELEV.	EOF 902.5	
SILT FENCE	SF	SF
SILT DIKE	SD	SD
LIMITS OF DISTURBANCE		
SOIL BORINGS		ST 5 902.5
DIRECTION OF OVERLAND FLOW		
TEMPORARY DIVERSION DITCH		
CHECK DAM		
LIMITS OF DRAINAGE SUB-BASIN		
BIO-ROLL		
INLET PROTECTION DEVICE 1	IP-1	
INLET PROTECTION DEVICE 2	IP-2	
TEMPORARY STONE CONSTRUCTION ENTRANCE		
TEMPORARY SEDIMENT BASIN	SB	
TEMPORARY STORAGE AND PARKING AREA	TS	
TEMPORARY STABILIZATION MEASURES (SEED, MULCH, MATS OR BLANKETS AS OUTLINED IN THE SWPPP)	TSM	

SEQUENCE OF CONSTRUCTION

PHASE I:

1. INSTALL STABILIZED CONSTRUCTION ENTRANCES.
2. PREPARE TEMPORARY PARKING AND STORAGE AREA.
3. CONSTRUCT THE SILT FENCES ON THE SITE.
4. INSTALL INLET PROTECTION AROUND ALL STORM SEWER STRUCTURES
5. CONSTRUCT THE SEDIMENTATION AND SEDIMENT TRAP BASINS.
6. CLEAR AND GRUB THE SITE.
7. BEGIN GRADING THE SITE.
8. START CONSTRUCTION OF BUILDING PAD AND STRUCTURES.

NOTE TO CONTRACTOR

THE EROSION CONTROL PLAN SHEETS ALONG WITH THE REST OF THE SWPPP MUST BE KEPT ONSITE UNTIL THE NOTICE OF TERMINATION IS FILED WITH THE MPCA, THE CONTRACTOR MUST UPDATE THE SWPPP, INCLUDING THE EROSION CONTROL PLAN SHEETS AS NECESSARY TO INCLUDE ADDITIONAL REQUIREMENTS, SUCH AS ADDITIONAL OR MODIFIED BMPS DESIGNED TO CORRECT PROBLEMS IDENTIFIED. AFTER FILING THE NOTICE OF TERMINATION, THE SWPPP, INCLUDING THE EROSION CONTROL PLAN SHEETS, AND ALL REVISIONS TO IT MUST BE SUBMITTED TO THE OWNER, TO BE KEPT ON FILE IN ACCORDANCE WITH THE RECORD RETENTION REQUIREMENTS DESCRIBED IN THE SWPPP NARRATIVE.

AREA SUMMARY IN ACRES

SEEDED AREA	1.28 AC±
TOTAL DISTURBED	3.26 AC±
PRE - CONSTRUCTION IMPERVIOUS	2.48 AC±
POST - CONSTRUCTION IMPERVIOUS	2.70 AC±

* REFER TO SHEET C5.03 FOR GENERAL NOTES, MAINTENANCE NOTES, LOCATION MAPS, AND STANDARD DETAILS

EROSION CONTROL MATERIALS QUANTITIES

ITEM	UNIT	QUANTITY
SILT FENCE	LINEAR FEET	0
SILT DIKE	LINEAR FEET	185
BIO-ROLL	LINEAR FEET	393
CONSTRUCTION ENTRANCE	UNIT	1
INLET PROTECTION DEVICE (IP-2)	UNIT	5
INLET PROTECTION DEVICE (IP-3)	UNIT	8

NORTH

0 30 60
SCALE IN FEET

Sambatek
www.sambatek.com
12800 Whitewater Drive, Suite 300
Minnetonka, MN 55343
763.476.6010 telephone
763.476.8532 facsimile
Engineering | Surveying | Planning | Environmental

Client
ROBERT ST INVESTORS, LLLP

VENTURE PASS PARTNERS LLC
A DEVELOPMENT COMPANY

Project
LOTHENBACH/ ROBERT ST COMMERCIAL REDEVELOPMENT

Location
WEST ST. PAUL, MN

Certification

I hereby certify that this plan, specification or report was prepared by me or under my direct supervision and that I am a duly licensed professional ENGINEER under the laws of the state of Minnesota.

NOT FOR CONSTRUCTION

Michael G. Bulthuis
Registration No. 50860 Date: 04/22/2016

If applicable, contact us for a wet signed copy of this plan which is available upon request at Sambatek's, Minnetonka, MN office.

Summary

Designed: MGB Drawn:
Approved: Book / Page:
Phase: PRELIMINARY Initial Issue: 04/22/2016

Revision History

No.	Date	By	Submittal / Revision
	4/22/16		CITY SUBMITTAL
	5/6/16		REVISED CITY SUBMITTAL

Sheet Title
EROSION & SEDIMENT CONTROL PLAN - PHASE I

Sheet No. Revision
C5.01

Project No. CON20491

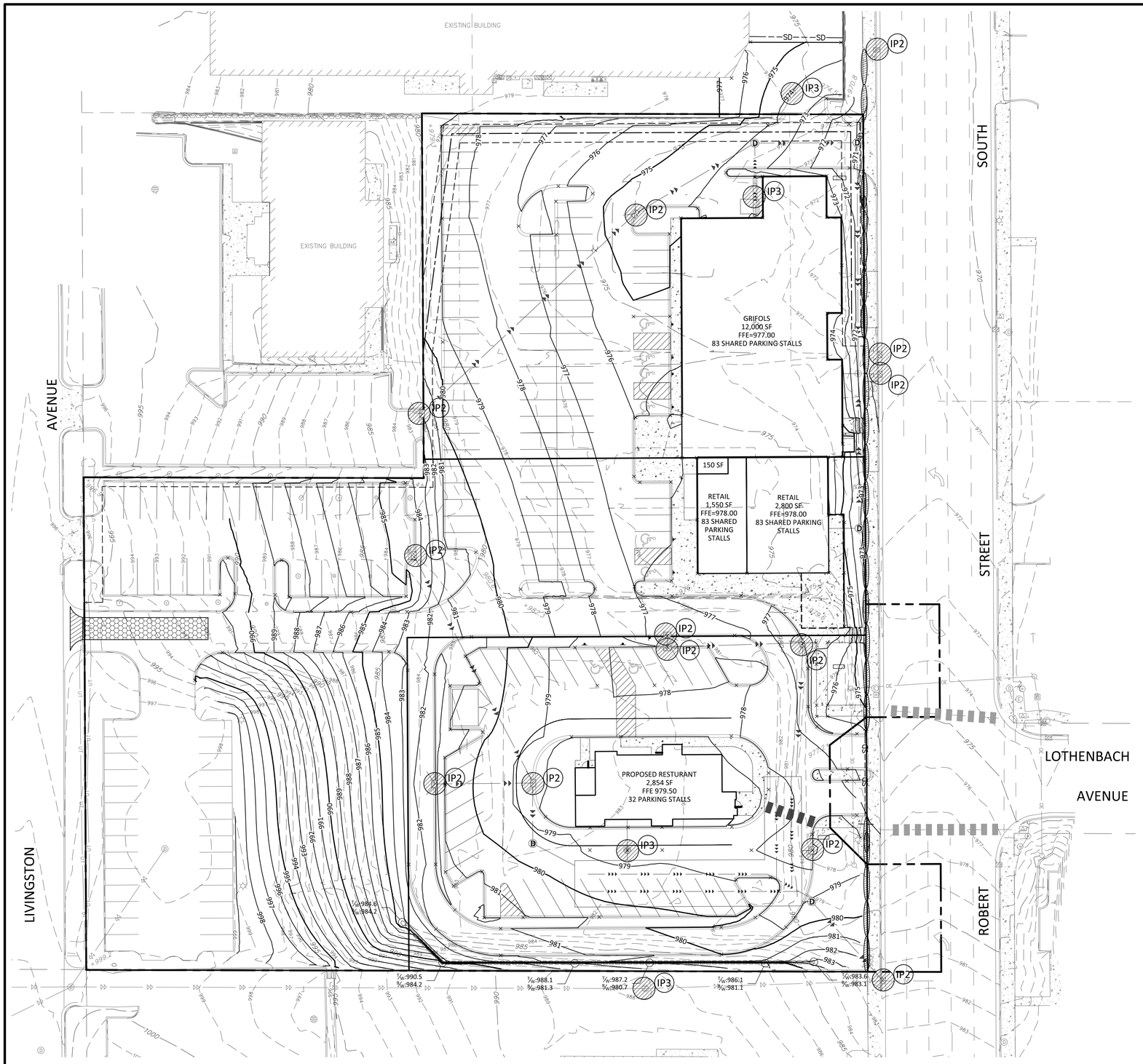

LEGEND

	PROPOSED	EXISTING
CURB & GUTTER		
STORM SEWER		
DRAINTILE		
CONTOUR	902	902
RIP RAP		
OVERFLOW ELEV.	EOF 902.5	
SILT FENCE	SF	SF
SILT DIKE	SD	SD
LIMITS OF DISTURBANCE		
SOIL BORINGS		ST 5 902.5
DIRECTION OF OVERLAND FLOW		
TEMPORARY DIVERSION DITCH		
CHECK DAM		
LIMITS OF DRAINAGE SUB-BASIN		
BIO-ROLL		
INLET PROTECTION DEVICE 1	IP-1	
INLET PROTECTION DEVICE 2	IP-2	
TEMPORARY STONE CONSTRUCTION ENTRANCE		
TEMPORARY SEDIMENT BASIN	SB	
TEMPORARY STORAGE AND PARKING AREA	TS	
TEMPORARY STABILIZATION MEASURES (SEED, MULCH, MATS OR BLANKETS AS OUTLINED IN THE SWPPP)	TSM	

SEQUENCE OF CONSTRUCTION

PHASE II:

1. TEMPORARILY SEED DENUDED AREAS.
2. INSTALL UTILITIES, UNDERDRAINS, STORM SEWERS, CURBS AND GUTTERS.
3. INSTALL RIP RAP AROUND OUTLET STRUCTURES.
4. INSTALL INLET PROTECTION AROUND ALL STORM SEWER STRUCTURES.
5. PREPARE SITE FOR PAVING.
6. PAVE SITE.
7. INSTALL INLET PROTECTION DEVICES.
8. COMPLETE GRADING AND INSTALL PERMANENT SEEDING AND PLANTING.
9. REMOVE ALL TEMPORARY EROSION AND SEDIMENT CONTROL DEVICES (ONLY IF SITE IS STABILIZED), IF REQUIRED BY THE CONTRACT

NOTE TO CONTRACTOR

THE EROSION CONTROL PLAN SHEETS ALONG WITH THE REST OF THE SWPPP MUST BE KEPT ONSITE UNTIL THE NOTICE OF TERMINATION IS FILED WITH THE MPCA, THE CONTRACTOR MUST UPDATE THE SWPPP, INCLUDING THE EROSION CONTROL PLAN SHEETS AS NECESSARY TO INCLUDE ADDITIONAL REQUIREMENTS, SUCH AS ADDITIONAL OR MODIFIED BMPS DESIGNED TO CORRECT PROBLEMS IDENTIFIED. AFTER FILING THE NOTICE OF TERMINATION, THE SWPPP, INCLUDING THE EROSION CONTROL PLAN SHEETS, AND ALL REVISIONS TO IT MUST BE SUBMITTED TO THE OWNER, TO BE KEPT ON FILE IN ACCORDANCE WITH THE RECORD RETENTION REQUIREMENTS DESCRIBED IN THE SWPPP NARRATIVE.

AREA SUMMARY IN ACRES

SEEDED AREA	1.28 AC±
TOTAL DISTURBED	3.26 AC±
PRE - CONSTRUCTION IMPERVIOUS	2.48 AC±
POST - CONSTRUCTION IMPERVIOUS	2.70 AC±

* REFER TO SHEET C5.03 FOR GENERAL NOTES, MAINTENANCE NOTES, LOCATION MAPS, AND STANDARD DETAILS

EROSION CONTROL MATERIALS QUANTITIES

ITEM	UNIT	QUANTITY
SILT FENCE	LINEAR FEET	0
SILT DIKE	LINEAR FEET	120
BIO-ROLL	LINEAR FEET	428
CONSTRUCTION ENTRANCE	UNIT	1
INLET PROTECTION DEVICE (IP-2)	UNIT	13
INLET PROTECTION DEVICE (IP-3)	UNIT	4

NORTH

0 30 60
SCALE IN FEET

Sambatek
www.sambatek.com
12800 Whitewater Drive, Suite 300
Minnetonka, MN 55343
763.476.6010 telephone
763.476.8532 facsimile
Engineering | Surveying | Planning | Environmental

Client
ROBERT ST INVESTORS, LLLP

VENTURE PASS PARTNERS LLC
A DEVELOPMENT COMPANY

Project
LOTHENBACH/ ROBERT ST COMMERCIAL REDEVELOPMENT

Location
WEST ST. PAUL, MN

Certification

I hereby certify that this plan, specification or report was prepared by me or under my direct supervision and that I am a duly licensed professional ENGINEER under the laws of the state of Minnesota.

NOT FOR CONSTRUCTION

Michael G. Bulthaupt
Registration No. 50860 Date: 04/22/2016

If applicable, this set is for a wet signed copy of this plan which is available upon request at Sambatek's, Minnetonka, MN office.

Summary

Designed: MGB Drawn:
Approved: Book / Page:
Phase: PRELIMINARY Initial Issue: 04/22/2016

Revision History

No.	Date	By	Submittal / Revision
	4/22/16		CITY SUBMITTAL
	5/6/16		REVISED CITY SUBMITTAL

Sheet Title
EROSION & SEDIMENT CONTROL PLAN - PHASE II

Sheet No. Revision
C5.02

Project No. CON20491

May 06, 2016 - 12:25pm - User:549 L:\PROJECTS\CON20491\dwg\Civil\Preliminary\20491-C501-EROS.dwg

EROSION & SEDIMENTATION CONTROL NOTES & DETAILS / "SITE MAP"

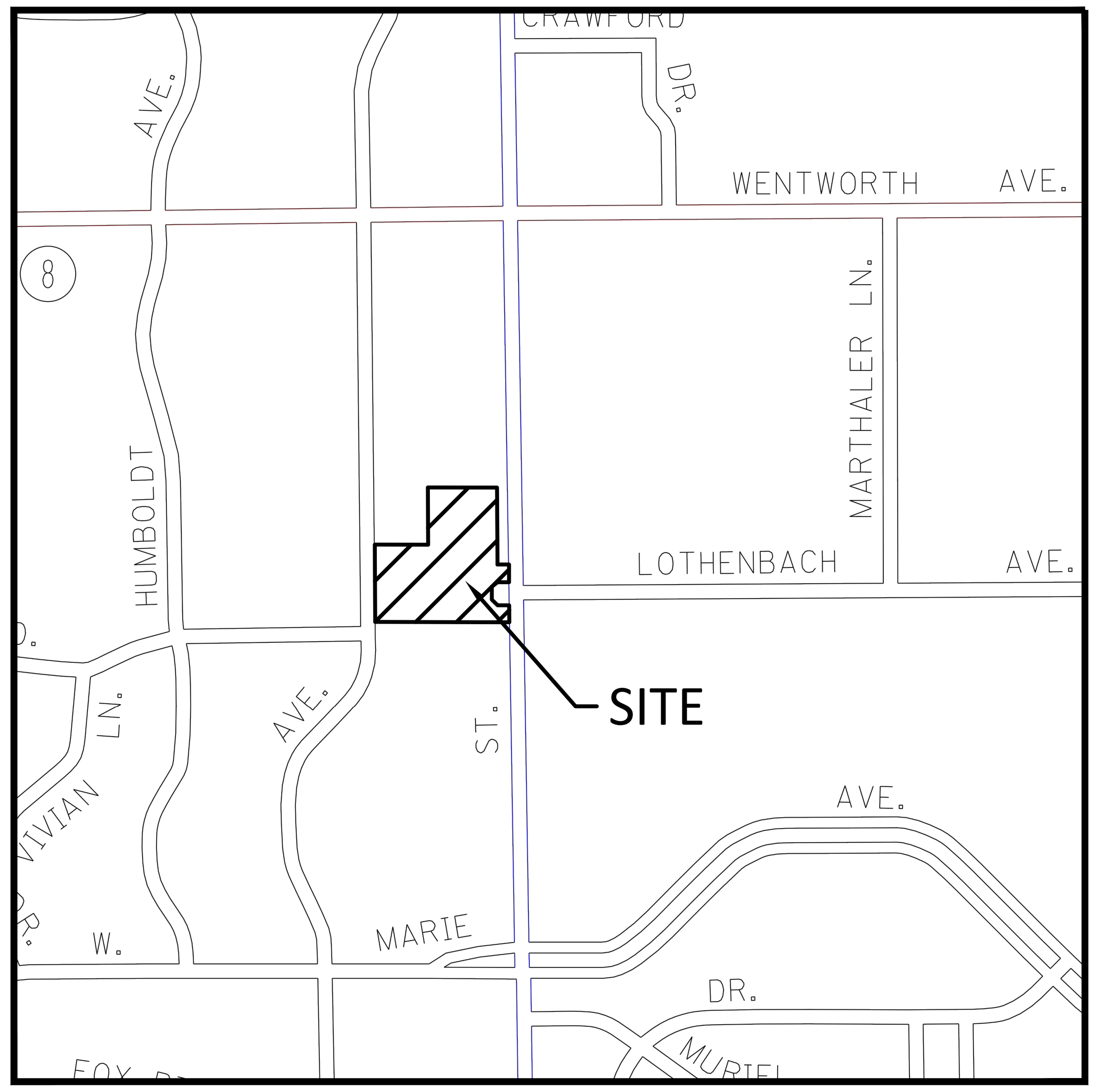

SITE LOCATION MAP
NOT TO SCALE

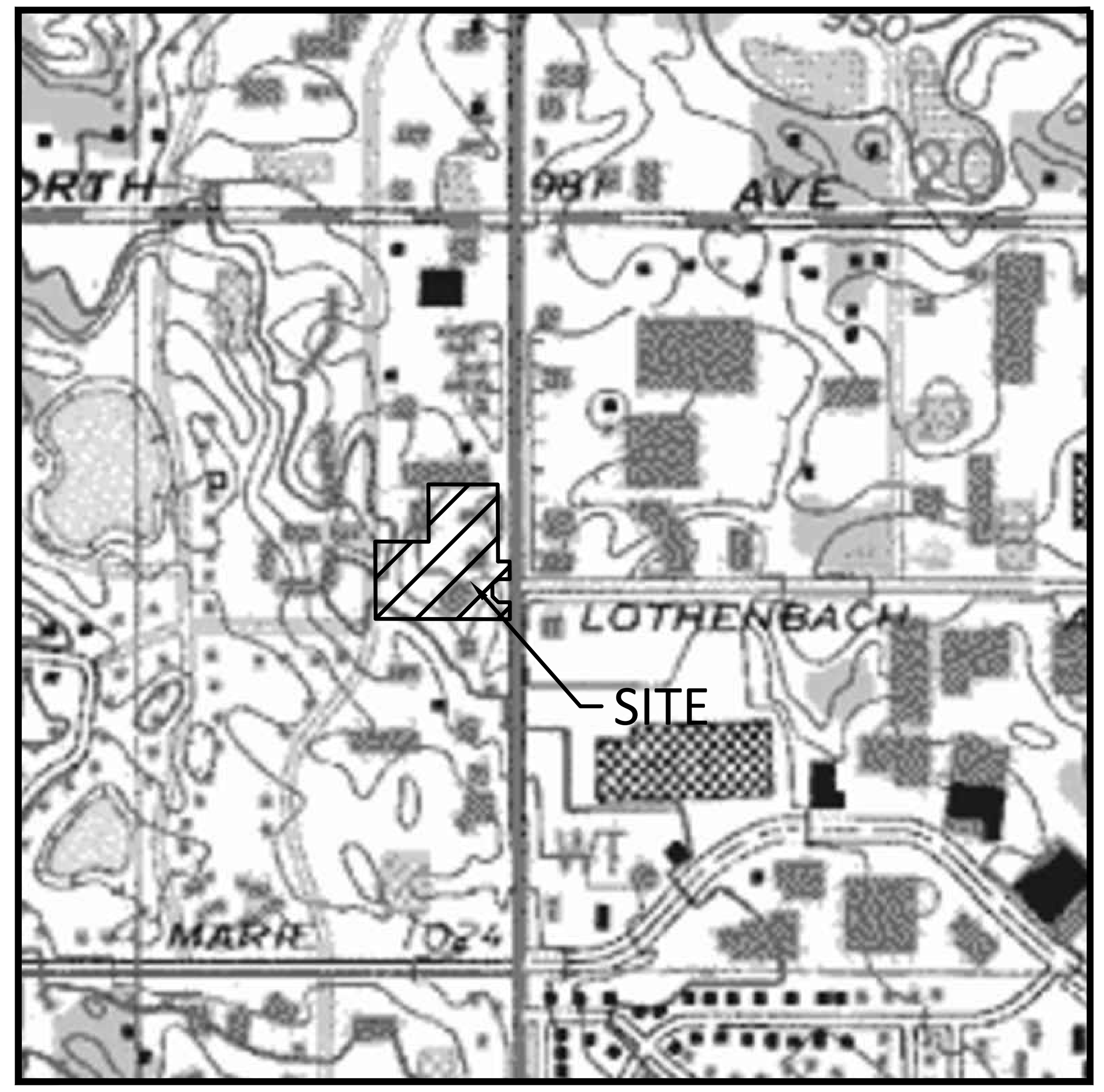

USGS MAP
NOT TO SCALE

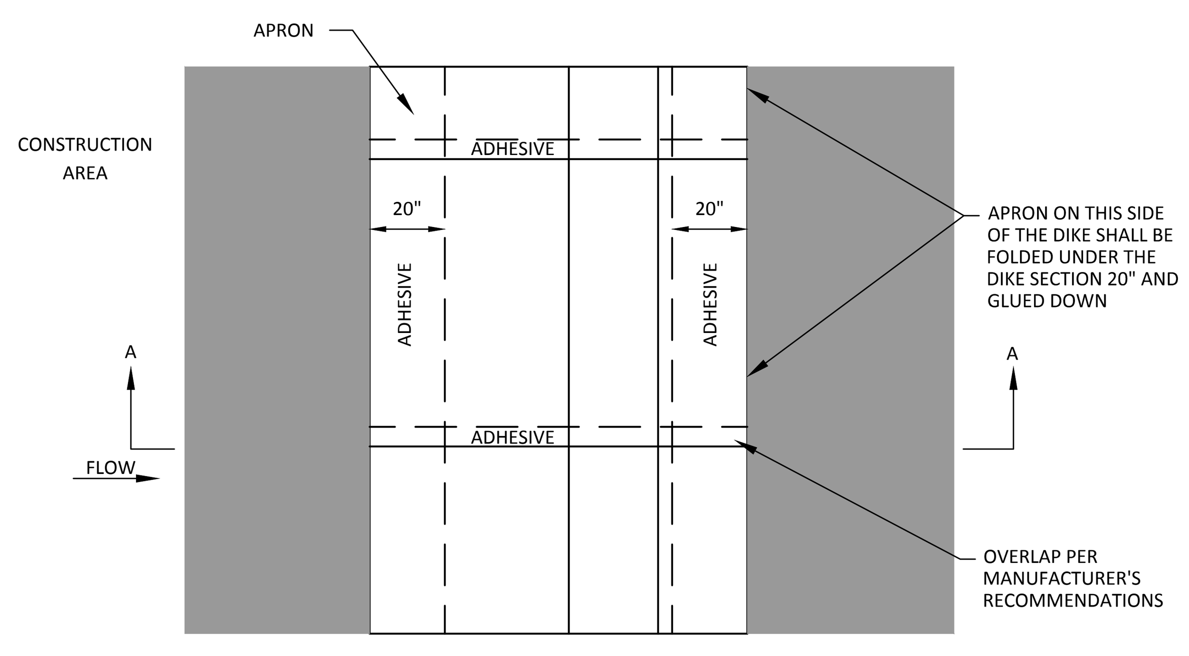

NOTES:
1. INSTALLED SILT DIKE UNIT SHALL HAVE CONTINUOUS AND FIRM CONTACT WITH PAVEMENT.

2. ADHESIVES SHALL BE LIQUID NAIL OR APPROVED EQUAL FOR CONCRETE PAVEMENT APPLICATIONS AND EMULSIFIED ASPHALT FOR ASPHALT APPLICATIONS.
ADHESIVE SHALL BE PLACED WHERE THE UNITS OVERLAP AND A 20" STRIP ALONG BOTH EDGES.

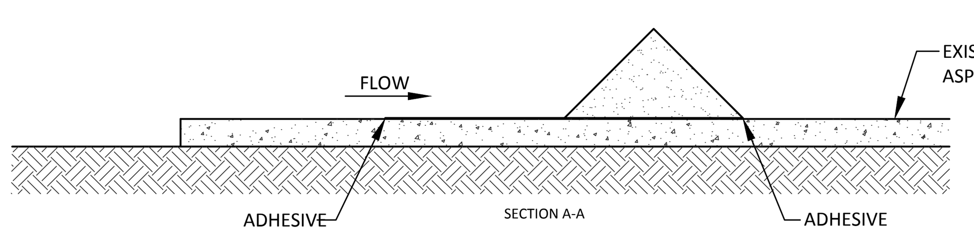

SILT DIKE ON EXISTING PAVEMENT
NOT TO SCALE

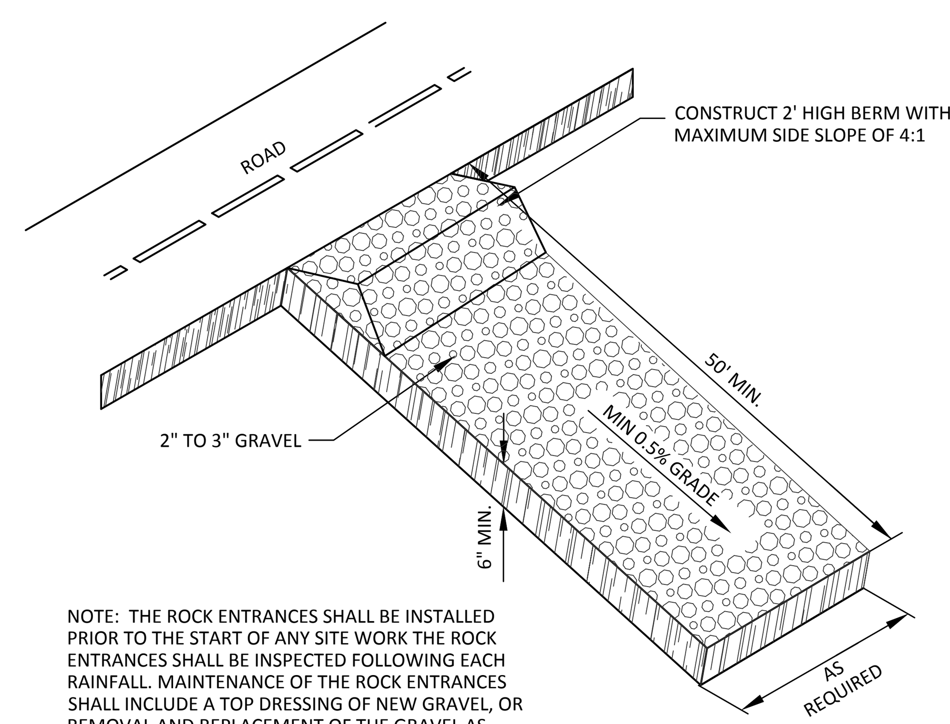

NOTE: THE ROCK ENTRANCES SHALL BE INSTALLED PRIOR TO THE START OF ANY SITE WORK THE ROCK ENTRANCES SHALL BE INSPECTED FOLLOWING EACH RAINFALL. MAINTENANCE OF THE ROCK ENTRANCES SHALL INCLUDE A TOP DRESSING OF NEW GRAVEL, OR REMOVAL AND REPLACEMENT OF THE GRAVEL AS NEEDED, TO KEEP THE ENTRANCE FREE FROM COLLECTED MUD.

ROCK ENTRANCE DRIVE
NOT TO SCALE

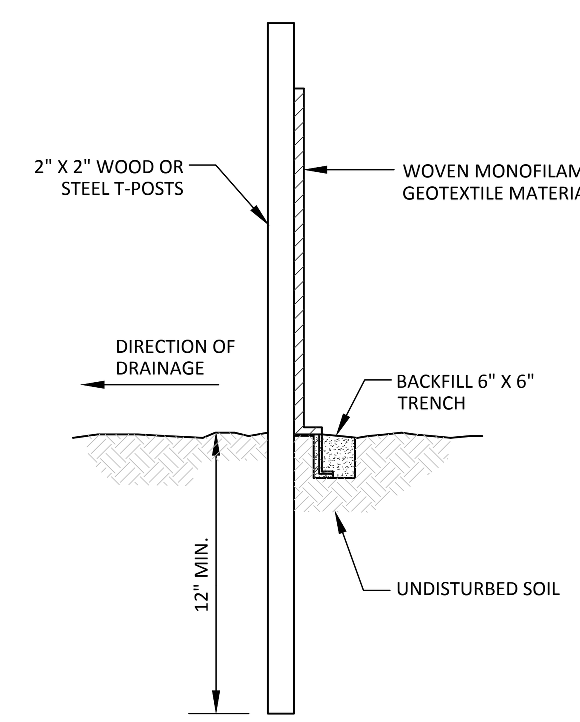

SILT FENCE DETAIL
NOT TO SCALE

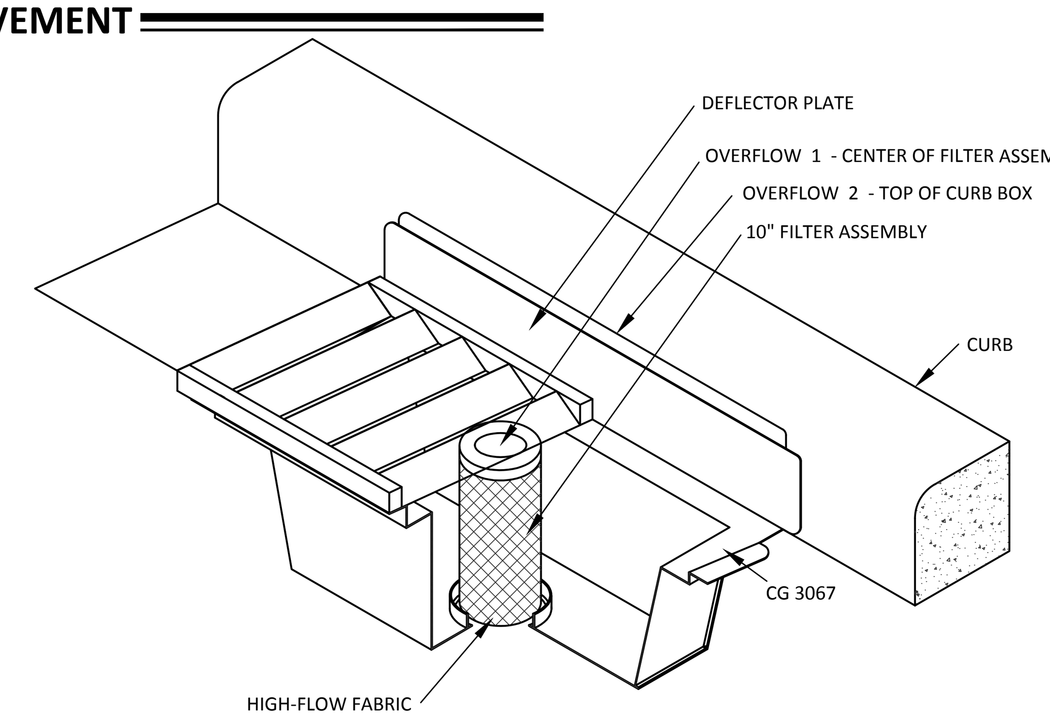

ROAD DRAIN CASTING APPLICABILTY
- NEENAH R-3067
- NEENAH R-3512

ROAD DRAIN INLET PROTECTION (IP-2)
NOT TO SCALE

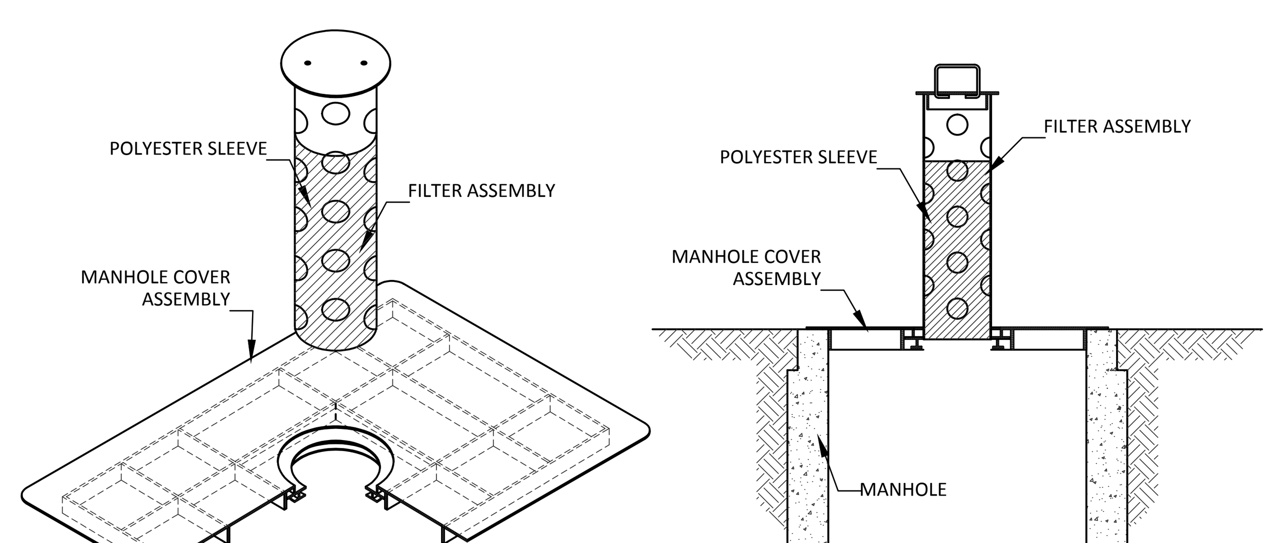

ISOMETRIC VIEW **IN-PLACE ELEVATION VIEW**

SPECIFICATIONS AND STANDARDS
- AISC MANUAL OF STEEL CONSTRUCTION, 9TH EDITION.
- AWS STRUCTURAL WELDING CODE-STEEL, D1.1-94.
- 29 CFR 1926-OSHA SAFETY AND HEALTH STANDARDS

DESIGN LOADS

ALLOWABLE AXLE WEIGHT LOAD	20000 LBS.
SAFETY FACTOR	2:1
WATER FLOW RATE (THROUGH POLYESTER FILTER)	0.476 CFS @ 3" HEAD 1.074 CFS @ 15" HEAD
MAXIMUM OVERFLOW RATE	1.113 CFS @ 6" HEAD 1.575 CFS @ 12" HEAD

AVAILABILITY
STOCK

ROAD DRAIN INLET PROTECTION TOP SLAB MODEL (IP-3)
NOT TO SCALE

DEVELOPER/OWNER:
SITE OPERATOR / GENERAL CONTRACTOR
SUPERINTENDENT:

GENERAL EROSION NOTES:

1. CONSTRUCTION SHALL COMPLY WITH ALL APPLICABLE GOVERNING CODES AND BE CONSTRUCTED TO SAME. WHERE A CONFLICT EXISTS BETWEEN LOCAL JURISDICTIONAL STANDARD SPECIFICATIONS AND SAMBATEK STANDARD SPECIFICATIONS, THE MORE STRINGENT SPECIFICATION SHALL APPLY.
2. THE STORMWATER POLLUTION PREVENTION PLAN (SWPPP) IS COMPRISED OF THIS DRAWING (EROSION & SEDIMENTATION CONTROL PLAN-ESC PLAN), THE STANDARD DETAILS, THE PLAN NARRATIVE, AND ITS APPENDICES, PLUS THE PERMIT AND ALL SUBSEQUENT REPORTS AND RELATED DOCUMENTS.
3. CONTRACTOR SHALL BE RESPONSIBLE FOR COMPLETING & SUBMITTING THE APPLICATION FOR THE MPCA GENERAL STORMWATER PERMIT FOR CONSTRUCTION ACTIVITY. ALL CONTRACTORS AND SUBCONTRACTORS INVOLVED WITH STORM WATER POLLUTION PREVENTION SHALL OBTAIN A COPY OF THE SWPPP AND THE STATE OF MINNESOTA NATIONAL POLLUTANT DISCHARGE ELIMINATION SYSTEM GENERAL PERMIT (NPDES PERMIT) AND BECOME FAMILIAR WITH THE CONTENTS. THE SWPPP AND ALL OTHER RELATED DOCUMENTS MUST BE KEPT AT THE SITE DURING CONSTRUCTION.
4. CONTRACTOR SHALL IMPLEMENT BEST MANAGEMENT PRACTICES (BMP'S) AS REQUIRED BY THE SWPPP & PERMITS. CONTRACTOR SHALL OVERSEE THE INSPECTION & MAINTENANCE OF THE BMP'S AND EROSION PREVENTION FROM BEGINNING OF CONSTRUCTION AND UNTIL CONSTRUCTION IS COMPLETED, IS APPROVED BY ALL AUTHORITIES, AND THE NOTICE OF TERMINATION (NOT) HAS BEEN FILED WITH THE MPCA BY EITHER THE OWNER OR OPERATOR AS APPROVED ON PERMIT. ADDITIONAL BMP'S SHALL BE IMPLEMENTED AS DICTATED BY CONDITIONS AT NO ADDITIONAL COST TO OWNER THROUGHOUT ALL PHASES OF CONSTRUCTION.
5. CONTRACTOR SHALL COMPLY WITH TRAINING REQUIREMENTS IN PART III.A.2 OF THE GENERAL PERMIT.
6. BMP'S AND CONTROLS SHALL CONFORM TO FEDERAL, STATE, OR LOCAL REQUIREMENTS OR MANUAL OF PRACTICE, AS APPLICABLE. CONTRACTOR SHALL IMPLEMENT ADDITIONAL CONTROLS AS DIRECTED BY PERMITTING AGENCY OR OWNER.
7. ESC PLAN MUST CLEARLY DELINEATE ALL STATE WATERS. PERMITS FOR ANY CONSTRUCTION ACTIVITY IMPACTING STATE WATERS OR REGULATED WETLANDS MUST BE MAINTAINED ON SITE AT ALL TIMES.
8. CONTRACTOR SHALL MINIMIZE CLEARING TO THE MAXIMUM EXTENT PRACTICAL OR AS REQUIRED BY THE GENERAL PERMIT. THE BOUNDARIES OF THE CLEARING LIMITS SHOWN ON THE ESC PLANS SHALL BE CLEARLY DELINEATED (E.G. WITH FLAGS, STAKES, SIGNS, SILT FENCE, ETC.) ON THE DEVELOPMENT SITE BEFORE WORK BEGINS. GROUND DISTURBING ACTIVITIES MUST NOT OCCUR OUTSIDE THE LIMITS OF DISTURBANCE.
9. GENERAL CONTRACTOR SHALL DENOTE ON PLAN THE TEMPORARY PARKING AND STORAGE AREA WHICH SHALL ALSO BE USED AS THE EQUIPMENT MAINTENANCE AND CLEANING AREA, EMPLOYEE PARKING AREA, AND AREA FOR LOCATING PORTABLE FACILITIES, OFFICE TRAILERS, AND TOILET FACILITIES.
10. ALL WASH WATER (CONCRETE TRUCKS, VEHICLE CLEANING, EQUIPMENT CLEANING, ETC.) MUST BE LIMITED TO A DEFINED AREA OF THE SITE AND SHALL BE CONTAINED AND PROPERLY TREATED OR DISPOSED. NO ENGINE DEGREASING IS ALLOWED ON SITE.
11. ALL LIQUID AND SOLID WASTES GENERATED BY CONCRETE WASHOUT OPERATIONS MUST BE CONTAINED IN A LEAK-PROOF CONTAINMENT FACILITY OR IMPERMEABLE LINER. A COMPACTED CLAY LINER THAT DOES NOT ALLOW WASHOUT LIQUIDS TO ENTER GROUND WATER IS CONSIDERED AN IMPERMEABLE LINER. THE LIQUID AND SOLID WASTES MUST NOT CONTACT THE GROUND, AND THERE MUST NOT BE RUNOFF FROM THE CONCRETE WASHOUT OPERATIONS OR AREAS. LIQUID AND SOLID WASTES MUST BE DISPOSED OF PROPERLY AND IN COMPLIANCE WITH MPCA REGULATIONS. A SIGN MUST BE INSTALLED ADJACENT TO EACH WASHOUT FACILITY TO INFORM CONCRETE EQUIPMENT OPERATORS TO UTILIZE THE PROPER FACILITIES. SELF-CONTAINED CONCRETE WASHOUTS ON CONCRETE DELIVERY TRUCKS ARE ALLOWED.
12. SUFFICIENT OIL AND GREASE ABSORBING MATERIALS AND FLOTATION BOOMS SHALL BE MAINTAINED ON SITE OR READILY AVAILABLE TO CONTAIN AND CLEAN-UP FUEL OR CHEMICAL SPILLS AND LEAKS.
13. DUST ON THE SITE SHALL BE CONTROLLED. THE USE OF MOTOR OILS AND OTHER PETROLEUM BASED OR TOXIC LIQUIDS FOR DUST SUPPRESSION OPERATIONS IS PROHIBITED.
14. SOLID WASTE: COLLECTED SEDIMENT, ASPHALT & CONCRETE MILLINGS, FLOATING DEBRIS, PAPER, PLASTIC, FABRIC, CONSTRUCTION & DEMOLITION DEBRIS & OTHER WASTES MUST BE DISPOSED OF PROPERLY & MUST COMPLY WITH MPCA DISPOSAL REQUIREMENTS.
15. HAZARDOUS MATERIALS: OIL, GASOLINE, PAINT & ANY HAZARDOUS SUBSTANCES MUST BE PROPERLY STORED, INCLUDING SECONDARY CONTAINMENT, TO PREVENT SPILLS, LEAKS OR OTHER DISCHARGE. RESTRICTED ACCESS TO STORAGE AREAS MUST BE PROVIDED TO PREVENT VANDALISM. STORAGE & DISPOSAL OF HAZARDOUS WASTE MUST BE IN COMPLIANCE WITH MPCA REGULATIONS.
16. ALL STORM WATER POLLUTION PREVENTION MEASURES PRESENTED ON THIS PLAN, AND IN THE SWPPP, SHALL BE INITIATED AS SOON AS PRACTICABLE AND PRIOR TO SOIL DISTURBING ACTIVITIES UPSLOPE.
17. DISTURBED PORTIONS OF THE SITE WHERE CONSTRUCTION ACTIVITY HAS STOPPED SHALL BE TEMPORARILY SEEDED, WITHIN 14 DAYS OF INACTIVITY. SEEDING SHALL BE IN ACCORDANCE WITH MN/DOT SEED MIXTURE NUMBER 100 OR 110 DEPENDING ON THE SEASON OF PLANTING (SEE MN/DOT SPECIFICATION SECTION 2575.3) SEEDING METHOD AND APPLICATION RATE SHALL CONFORM TO MN/DOT SPECIFICATION SECTION 2575.3. TEMPORARY MULCH SHALL BE APPLIED IN ACCORDANCE WITH MN/DOT SPECIFICATION SECTION 2575.3F1 AND 2575.3G. ALTERNATIVELY, HYDRAULIC SOIL STABILIZER IN ACCORDANCE WITH MN/DOT SPECIFICATION SECTION 2575.3H MAY BE USED IN PLACE OF TEMPORARY MULCH.
18. DISTURBED PORTIONS OF THE SITE WHERE CONSTRUCTION ACTIVITY HAS PERMANENTLY STOPPED SHALL BE PERMANENTLY STABILIZED. THESE AREAS SHALL BE STABILIZED IN ACCORDANCE WITH THE TIME TABLE DESCRIBED ABOVE. REFER TO THE GRADING PLAN AND/OR LANDSCAPE PLAN FOR VEGETATIVE COVER.
19. CONTRACTORS OR SUBCONTRACTORS WILL BE RESPONSIBLE FOR REMOVING SEDIMENT FROM CONVEYANCES & FROM TEMPORARY SEDIMENTATION BASINS THAT ARE TO BE USED AS PERMANENT WATER QUALITY MANAGEMENT BASINS. SEDIMENT MUST BE STABILIZED TO PREVENT IT FROM BEING WASHED BACK INTO THE BASIN, CONVEYANCES, OR DRAINAGEWAYS DISCHARGING OFF-SITE OR TO SURFACE WATERS. THE CLEANOUT OF PERMANENT BASINS MUST BE SUFFICIENT TO RETURN THE BASIN TO DESIGN CAPACITY.
20. ON-SITE & OFF-SITE SOIL STOCKPILE AND BORROW AREAS SHALL BE PROTECTED FROM EROSION AND SEDIMENTATION THROUGH IMPLEMENTATION OF BMP'S. STOCKPILE AND BORROW AREA LOCATIONS SHALL BE NOTED ON THE SITE MAP AND PERMITTED IN ACCORDANCE WITH GENERAL PERMIT REQUIREMENTS.
21. TEMPORARY SOIL STOCKPILES MUST HAVE SILT FENCE OR OTHER EFFECTIVE SEDIMENT CONTROLS & CANNOT BE PLACED IN SURFACE WATERS, INCLUDING STORMWATER CONVEYANCES SUCH AS CURB & GUTTER SYSTEMS OR CONDUITS & DITCHES.
22. SLOPES SHALL BE LEFT IN A ROUGHENED CONDITION DURING THE GRADING PHASE TO REDUCE RUNOFF VELOCITIES AND EROSION.
23. DUE TO THE GRADE CHANGES DURING THE DEVELOPMENT OF THE PROJECT, CONTRACTOR SHALL BE RESPONSIBLE FOR ADJUSTING THE EROSION CONTROL MEASURES (SILT FENCES, CHECK DAMS, INLET PROTECTION DEVICES, ETC.) TO PREVENT EROSION.
24. ALL CONSTRUCTION SHALL BE STABILIZED AT THE END OF EACH WORKING DAY, THIS INCLUDES BACKFILLING OF TRENCHES FOR UTILITY CONSTRUCTION AND PLACEMENT OF GRAVEL OR BITUMINOUS PAVING FOR ROAD CONSTRUCTION.

MAINTENANCE NOTES:

ALL MEASURES STATED ON THIS EROSION AND SEDIMENT CONTROL PLAN, AND IN THE STORM WATER POLLUTION PREVENTION PLAN SHALL BE MAINTAINED IN FULLY FUNCTIONAL CONDITION UNTIL NO LONGER REQUIRED FOR A COMPLETED PHASE OF WORK OR FINAL STABILIZATION OF THE SITE. THE DESIGNATED CONTACT PERSON NOTED ON THIS PLAN MUST ROUTINELY INSPECT THE CONSTRUCTION ON SITE ONCE EVERY SEVEN DAYS DURING ACTIVE CONSTRUCTION AND WITHIN 24 HOURS AFTER A RAINFALL EVENT GREATER THAN 0.5 INCHES IN 24 HOURS. ALL EROSION AND SEDIMENTATION CONTROL MEASURES SHALL BE CLEANED AND REPAIRED IN ACCORDANCE WITH THE FOLLOWING:

1. ALL SILT FENCES MUST BE REPAIRED, REPLACED, OR SUPPLEMENTED WHEN THEY BECOME NONFUNCTIONAL OR THE SEDIMENT REACHES 1/3 OF THE HEIGHT OF THE FENCE. THESE REPAIRS MUST BE MADE WITHIN 24 HOURS OF DISCOVERY, OR AS SOON AS FIELD CONDITIONS ALLOW ACCESS.
2. TEMPORARY AND PERMANENT SEDIMENTATION BASINS MUST BE DRAINED AND THE SEDIMENT REMOVED WHEN THE DEPTH OF SEDIMENT COLLECTED IN THE BASIN REACHES 1/2 THE STORAGE VOLUME. DRAINAGE AND REMOVAL MUST BE COMPLETED WITHIN 72 HOURS OF DISCOVERY, OR AS SOON AS FIELD CONDITIONS ALLOW ACCESS (SEE PART IV.D. OF THE GENERAL PERMIT).
3. SURFACE WATERS, INCLUDING DRAINAGE DITCHES AND CONVEYANCE SYSTEMS, MUST BE INSPECTED FOR EVIDENCE OF SEDIMENT BEING DEPOSITED BY EROSION. CONTRACTOR MUST REMOVE ALL DELTAS AND SEDIMENT DEPOSITED IN SURFACE WATERS, INCLUDING DRAINAGE WAYS, CATCH BASINS, AND OTHER DRAINAGE SYSTEMS, AND RESTABILIZE THE AREAS WHERE SEDIMENT REMOVAL RESULTS IN EXPOSED SOIL. THE REMOVAL AND STABILIZATION MUST TAKE PLACE WITHIN SEVEN (7) DAYS OF DISCOVERY UNLESS PRECLUDED BY LEGAL, REGULATORY, OR PHYSICAL ACCESS CONSTRAINTS. CONTRACTOR SHALL USE ALL REASONABLE EFFORTS TO OBTAIN ACCESS. IF PRECLUDED, REMOVAL AND STABILIZATION MUST TAKE PLACE WITHIN SEVEN (7) CALENDAR DAYS OF OBTAINING ACCESS. CONTRACTOR IS RESPONSIBLE FOR CONTACTING ALL LOCAL, REGIONAL, STATE AND FEDERAL AUTHORITIES AND RECEIVING ANY APPLICABLE PERMITS, PRIOR TO CONDUCTING ANY WORK.
4. CONSTRUCTION SITE VEHICLE EXIT LOCATIONS MUST BE INSPECTED FOR EVIDENCE OF OFF-SITE SEDIMENT TRACKING ONTO PAVED SURFACES. TRACKED SEDIMENT MUST BE REMOVED FROM ALL OFF-SITE PAVED SURFACES, WITHIN 24 HOURS OF DISCOVERY, OR IF APPLICABLE, WITHIN A SHORTER TIME TO COMPLY WITH PART IV.C.6 OF THE GENERAL PERMIT.
5. CONTRACTOR IS RESPONSIBLE FOR THE OPERATION AND MAINTENANCE OF TEMPORARY AND PERMANENT WATER QUALITY MANAGEMENT BMPS, AS WELL AS ALL EROSION PREVENTION AND SEDIMENT CONTROL BMPS, FOR THE DURATION OF THE CONSTRUCTION WORK AT THE SITE. THE PERMITTEE(S) ARE RESPONSIBLE UNTIL ANOTHER PERMITTEE HAS ASSUMED CONTROL (ACCORDING TO PART II.B.5 OF THE MPCA GENERAL PERMIT) OVER ALL AREAS OF THE SITE THAT HAVE NOT BEEN FINALLY STABILIZED OR THE SITE HAS UNDERGONE FINAL STABILIZATION, AND A (N.O.T.) HAS BEEN SUBMITTED TO THE MPCA.
6. IF SEDIMENT ESCAPES THE CONSTRUCTION SITE, OFF-SITE ACCUMULATIONS OF SEDIMENT MUST BE REMOVED IN A MANNER AND AT A FREQUENCY SUFFICIENT TO MINIMIZE OFF-SITE IMPACTS (E.G., FUGITIVE SEDIMENT IN STREETS COULD BE WASHED INTO STORM SEWERS BY THE NEXT RAIN AND/OR POSE A SAFETY HAZARD TO USERS OF PUBLIC STREETS).
7. ALL INFILTRATION AREAS MUST BE INSPECTED TO ENSURE THAT NO SEDIMENT FROM ONGOING CONSTRUCTION ACTIVITIES IS REACHING THE INFILTRATION AREA AND THESE AREAS ARE PROTECTED FROM COMPACTION DUE TO CONSTRUCTION EQUIPMENT DRIVING ACROSS THE INFILTRATION AREA.

Sambatek
www.sambatek.com
12800 Whitewater Drive, Suite 300
Minnetonka, MN 55343
763.476.6010 telephone
763.476.8532 facsimile
Engineering | Surveying | Planning | Environmental

Client
ROBERT ST INVESTORS, LLLP

VENTURE PASS PARTNERS LLC
A DEVELOPMENT COMPANY

Project
LOTHENBACH/ ROBERT ST COMMERCIAL REDEVELOPMENT

Location
WEST ST. PAUL, MN

Certification
I hereby certify that this plan, specification or report was prepared by me or under my direct supervision and that I am a duly licensed professional ENGINEER under the laws of the state of Minnesota.

Michael G. Bultman
Registration No. 50860 Date: 04/22/2016

If applicable, contact us for a wet signed copy of this plan which is available upon request at Sambatek's, Minnetonka, MN office.

NOT FOR CONSTRUCTION

Summary
Designed: MGB Drawn:
Approved: Book / Page:
Phase: PRELIMINARY Initial Issue: 04/22/2016

Revision History

No.	Date	By	Submittal / Revision
	4/22/16		CITY SUBMITTAL
	5/6/16		REVISED CITY SUBMITTAL

Sheet Title
EROSION & SEDIMENT CONTROL DETAILS

Sheet No. **Revision**
C5.03

Project No. CON20491

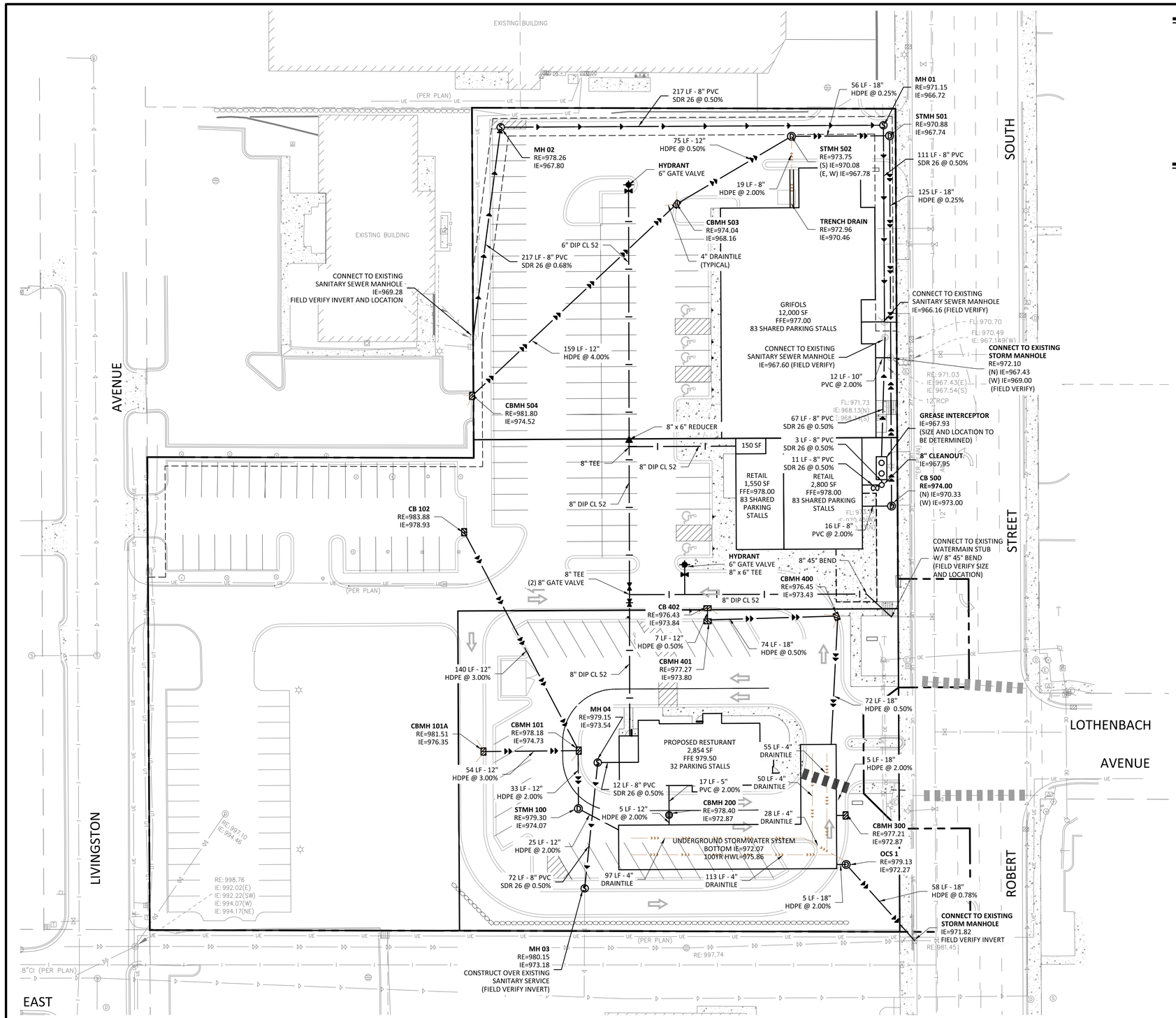

LEGEND

	PROPOSED	EXISTING
CURB & GUTTER		
STORM SEWER	D	D
SANITARY SEWER	S	S
FORCEMAIN (SAN.)	FM	FM
WATERMAIN	W	W
EASEMENT		
DRAINTILE		
GAS LINE	GL	GL
ELECTRIC	UE	UE
TELEPHONE	UT	UT

UTILITY CONSTRUCTION NOTES

1. COORDINATE ALL BUILDING SERVICE CONNECTIONS AND INVERT ELEVATIONS WITH MECHANICAL CONTRACTOR PRIOR TO CONSTRUCTION.
2. SANITARY SEWER WITH FIVE FEET OR LESS COVER IS TO BE INSULATED FROM BUILDING TO POINT WHERE 5-FEET OF COVER IS ACHIEVED.
3. COORDINATE ALL UTILITY WORK ALONG ROBERT ST WITH MN/DOT PRIOR TO CONSTRUCTION.
4. COORDINATE ALL UTILITY RELOCATIONS AND REMOVALS WITH CITY AND MN/DOT PRIOR TO CONSTRUCTION.
5. RAISE/LOWER EXISTING MANHOLE RIM ELEVATIONS ALONG ROBERT STREET AS NEEDED.

Sambatek
www.sambatek.com
12800 Whitewater Drive, Suite 300
Minnetonka, MN 55343
763.476.6010 telephone
763.476.8532 facsimile
Engineering | Surveying | Planning | Environmental

Client
ROBERT ST INVESTORS, LLLP

VENTURE PASS PARTNERS LLC
A DEVELOPMENT COMPANY

Project
LOTHENBACH/ ROBERT ST COMMERCIAL REDEVELOPMENT

Location
WEST ST. PAUL, MN

Certification

I hereby certify that this plan, specification or report was prepared by me or under my direct supervision and that I am a duly licensed professional ENGINEER under the laws of the state of Minnesota.

Michael G. Bulthaupt
Registration No. 50860 Date: 04/22/2016

If applicable, contact us for a wet signed copy of this plan which is available upon request at Sambatek's, Minnetonka, MN office.

NOT FOR CONSTRUCTION

Summary

Designed: MGB Drawn:
Approved: Book / Page:
Phase: PRELIMINARY Initial Issue: 04/22/2016

Revision History

No.	Date	By	Submittal / Revision
	4/22/16		CITY SUBMITTAL
	5/6/16		REVISED CITY SUBMITTAL

Sheet Title
UTILITY PLAN

Sheet No. Revision
C6.01

Project No. CON20491

May 06, 2016 - 12:15pm - User:549 L:\PROJECTS\CON20491\dwg\Civil\Preliminary\20491-C601-UTIL.dwg

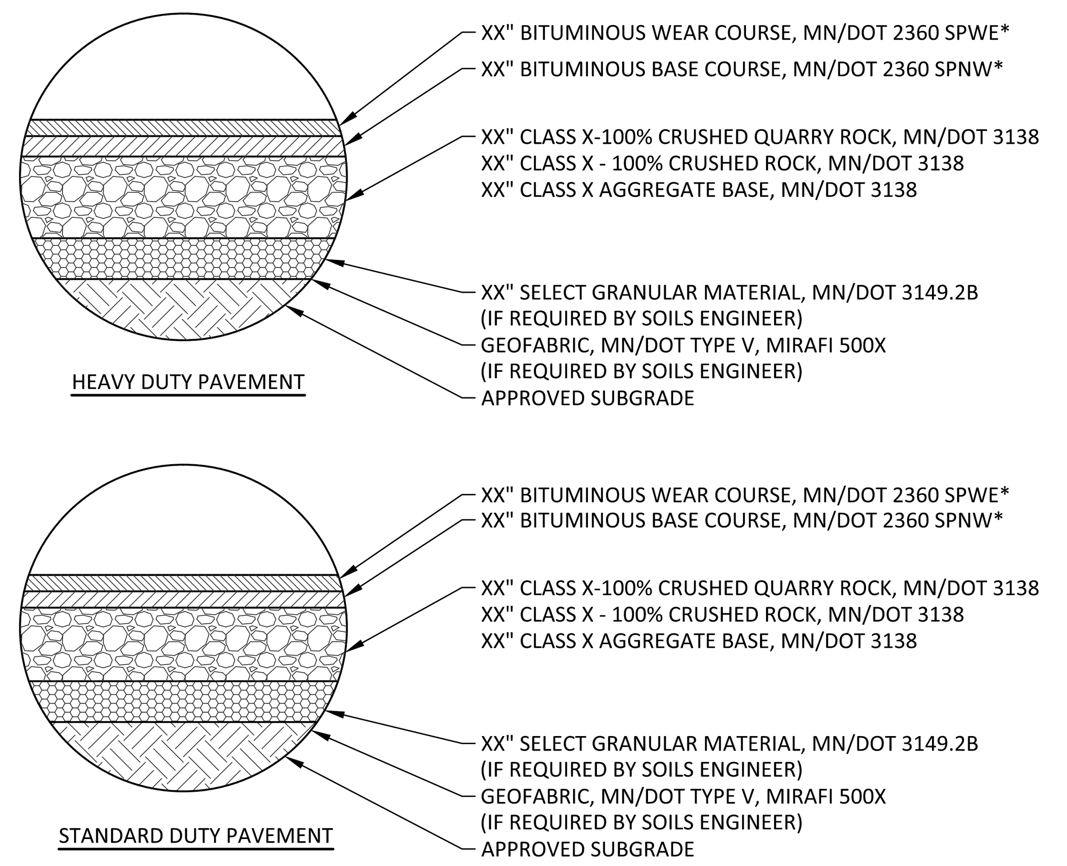

NOTES:
1. THE PAVEMENT SECTIONS SHALL BE CONSTRUCTED IN ACCORDANCE WITH MNDOT "STANDARD SPECIFICATION FOR CONSTRUCTION", AND ALSO THE REQUIREMENTS OF THE OWNER'S GEOTECHNICAL CONSULTANT.
2. ALL THICKNESSES, AS SPECIFIED, ARE TO BE CONSIDERED MINIMUM DEPTHS, AFTER COMPACTION.
3. MN/DOT SPEC. 2357 BITUMINOUS TACK COAT SHALL BE PLACED BETWEEN SUCCESSIVE BITUMINOUS LIFTS AND AGAINST ABUTTING CONCRETE CURB EDGES.

* REFER TO BITUMINOUS MIX DESIGN REQUIREMENT PROVIDED BY THE GEOTECHNICAL CONSULTANT

01 PAVEMENT SECTIONS
N.T.S.

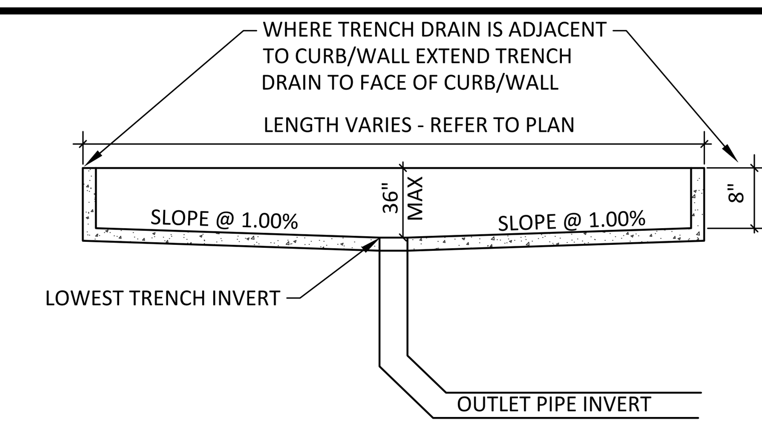

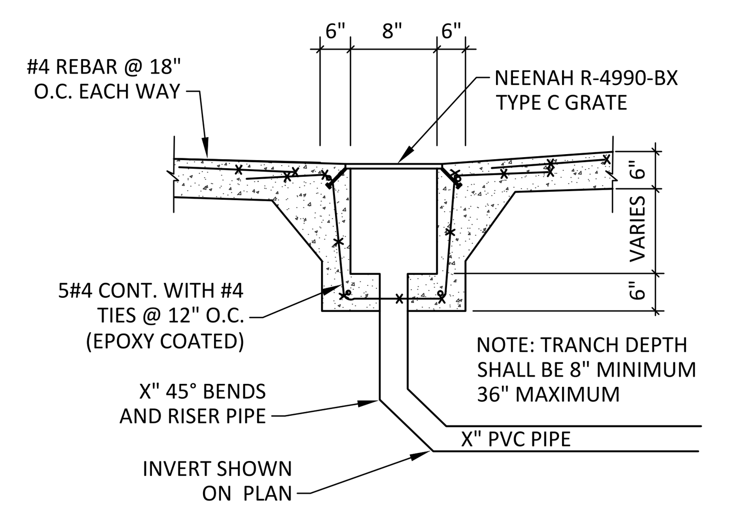

02 12" DIAMETER CATCH BASIN
N.T.S.

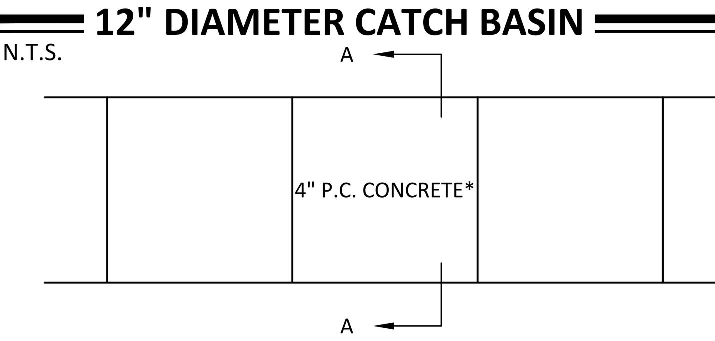

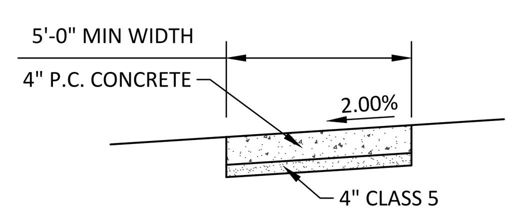

SECTION A-A

GENERAL NOTES FOR CONCRETE CONSTRUCTION:
1. THE CONCRETE SIDEWALKS SHALL BE CONSTRUCTED IN ACCORDANCE WITH THE REQUIREMENTS OF MN/DOT "STANDARD SPECIFICATIONS FOR CONSTRUCTION".
2. SIDEWALK CONTROL JOINTS SHALL BE LOCATED AT 5 FEET ON CENTER. SIDEWALK EXPANSION JOINTS SHALL BE LOCATED AT A MAXIMUM OF 100 FEET ON CENTER, AND WHERE SIDEWALK ABUTS CURB, STRUCTURES, AND OTHER FIXED OBJECTS. SEAL ALL EXPANSION JOINTS. BROOM FINISH SHALL BE PERPENDICULAR TO THE LINE OF TRAFFIC.

*THE THICKNESS SHALL BE INCREASED TO A MINIMUM DEPTH OF __ INCHES AT DRIVEWAY CROSSINGS.

06 CONCRETE SIDEWALK
N.T.S.

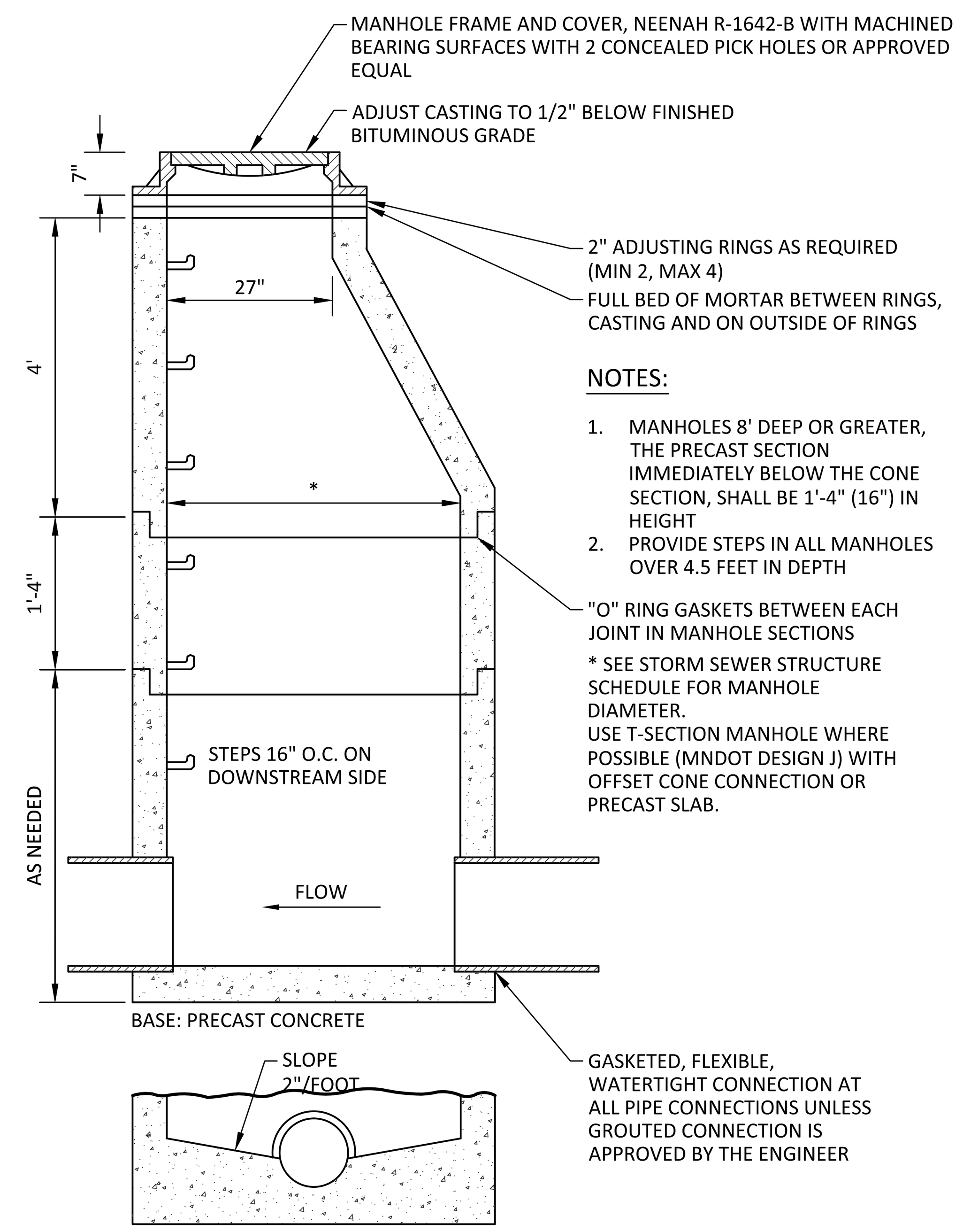

NOTES:
1. MANHOLES 8' DEEP OR GREATER, THE PRECAST SECTION IMMEDIATELY BELOW THE CONE SECTION, SHALL BE 1'-4" (16") IN HEIGHT
2. PROVIDE STEPS IN ALL MANHOLES OVER 4.5 FEET IN DEPTH

* SEE STORM SEWER STRUCTURE SCHEDULE FOR MANHOLE DIAMETER.
USE T-SECTION MANHOLE WHERE POSSIBLE (MNDOT DESIGN J) WITH OFFSET CONE CONNECTION OR PRECAST SLAB.

03 STORM SEWER MANHOLE
N.T.S.

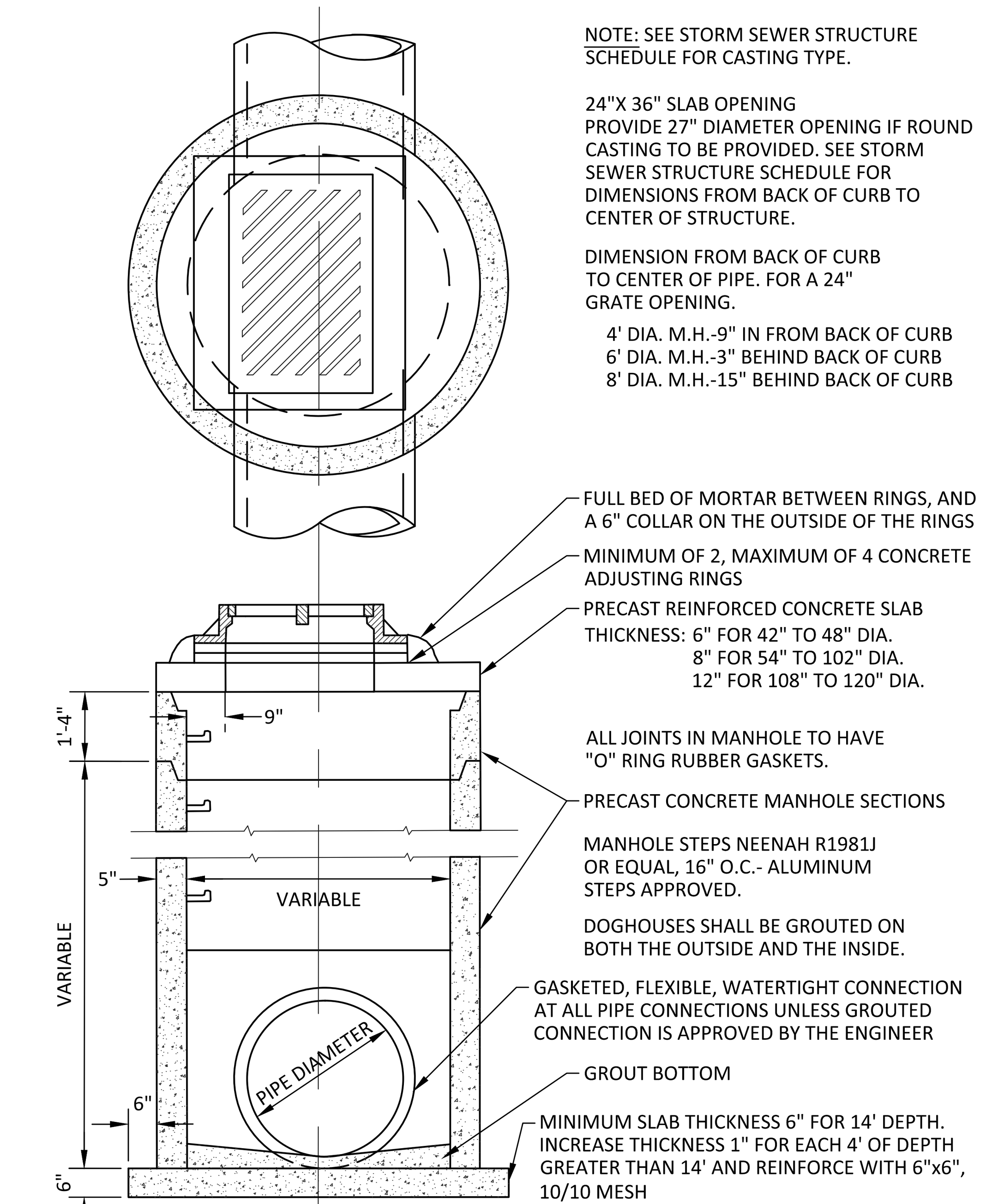

NOTE: SEE STORM SEWER STRUCTURE SCHEDULE FOR CASTING TYPE.

24"X 36" SLAB OPENING
PROVIDE 27" DIAMETER OPENING IF ROUND CASTING TO BE PROVIDED. SEE STORM SEWER STRUCTURE SCHEDULE FOR DIMENSIONS FROM BACK OF CURB TO CENTER OF STRUCTURE.

DIMENSION FROM BACK OF CURB TO CENTER OF PIPE. FOR A 24" GRATE OPENING.
4' DIA. M.H.-9" IN FROM BACK OF CURB
6' DIA. M.H.-3" BEHIND BACK OF CURB
8' DIA. M.H.-15" BEHIND BACK OF CURB

04 CATCH BASIN MANHOLE
N.T.S.

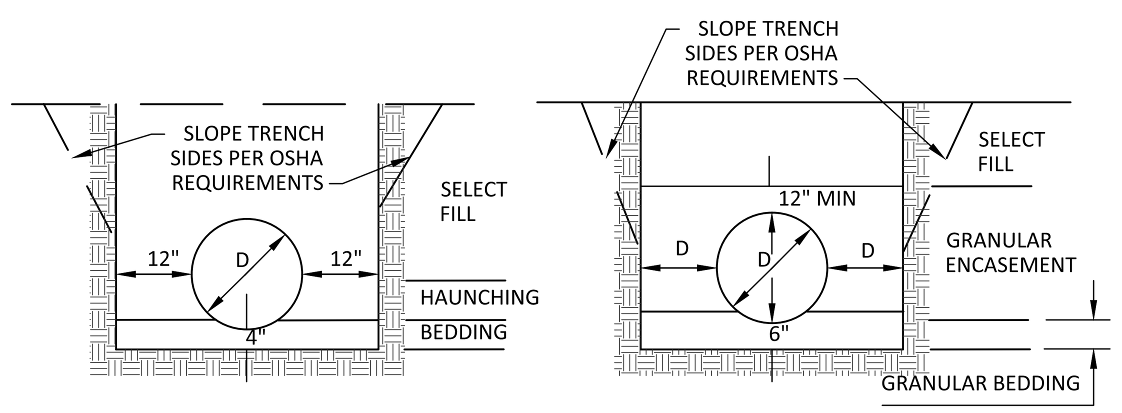

REINFORCED CONCRETE PIPE OR DIP
1. BEDDING AND HAUNCHING MATERIAL SHALL BE ASTM D2321-CI.I, II, III, OR IV A SOILS, AND SHALL BE SHAPED TO THE BOTTOM OF THE PIPE. COMPACT BEDDING MATERIAL TO 95% STANDARD PROCTOR.
2. SELECT FILL SHALL BE SELECT MATERIAL FREE OF LARGE ROCKS (3"+) AND SHALL BE PLACED IN 8" MAX. LOOSE LIFTS AND COMPACTED TO 95% STANDARD PROCTOR.

FLEXIBLE PIPE: INCLUDES CORRUGATEDMETAL PIPE
CORRUGATED POLYETHYLENE PIPE AND/OR POLYVINYL CHLORIDE PIPE
1. GRANULAR BEDDING AND ENCASEMENT MATERIAL SHALL BE CLASS I OR II (REF. ASTM D2321 OR MN/DOT 3149.2F) GRANULAR MATERIAL, AND SHALL BE COMPACTED TO 95% STANDARD PROCTOR.
2. SELECT FILL PLACEMENT AND COMPACTION. SAME AS FOR RCP.

NOTE: FOR HDPE INSTALLED BELOW EXISTING OR FUTURE GROUND WATER ELEVATIONS, PIPE BEDDING AND ENCASEMENT SHALL BE CLASS I, CRUSHED ROCK PER ASTM D2321.

05 TRENCH AND BEDDING DETAILS
N.T.S.

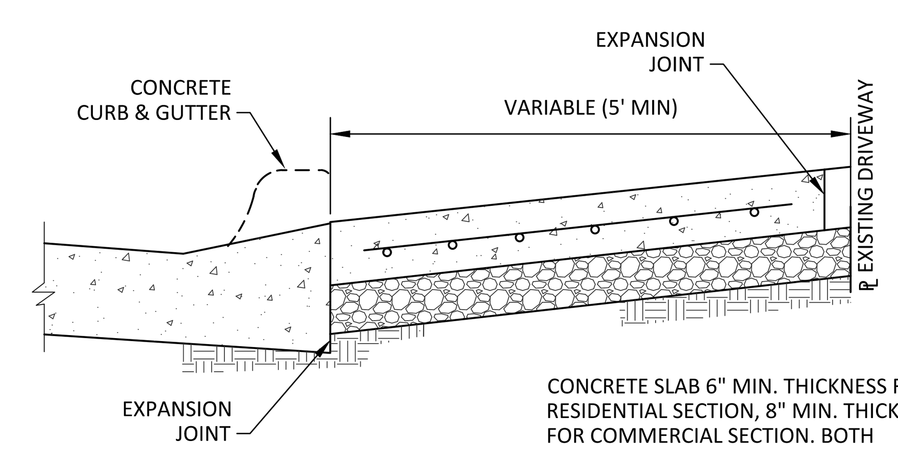

SECTION A-A

CONCRETE SLAB 6" MIN. THICKNESS FOR RESIDENTIAL SECTION, 8" MIN. THICKNESS FOR COMMERCIAL SECTION. BOTH SECTIONS TO BE REINFORCED WITH 6 x 6 10/10 STEEL MESH AND HAVE 6" OF COMPACTED GRANULAR SUBBASE. (SEE SPECIFICATIONS)

	RESIDENTIAL	COMMERCIAL
"B"	3 FT	5 FT

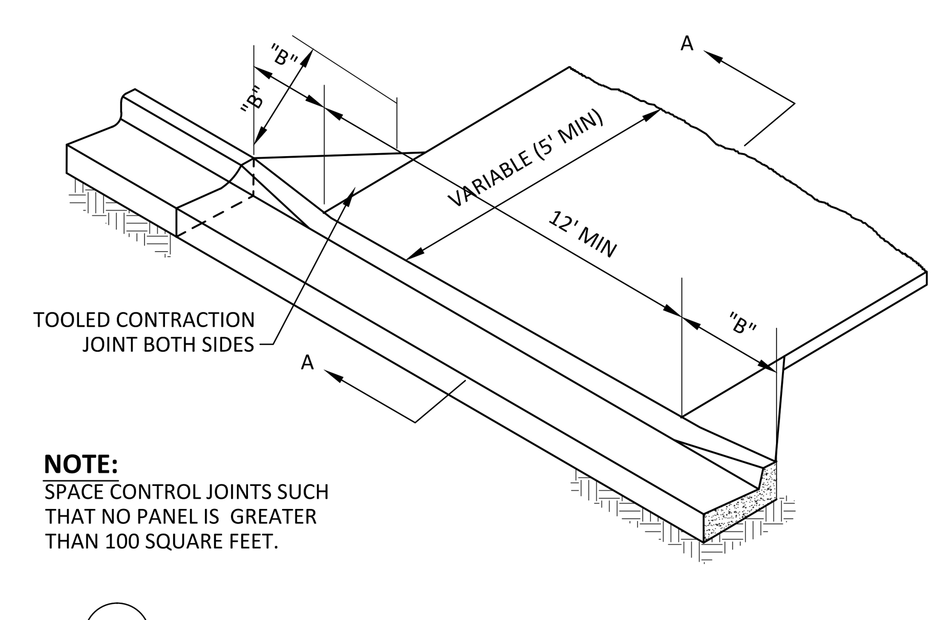

NOTE:
SPACE CONTROL JOINTS SUCH THAT NO PANEL IS GREATER THAN 100 SQUARE FEET.

07 CONCRETE DRIVEWAY APRON
N.T.S.

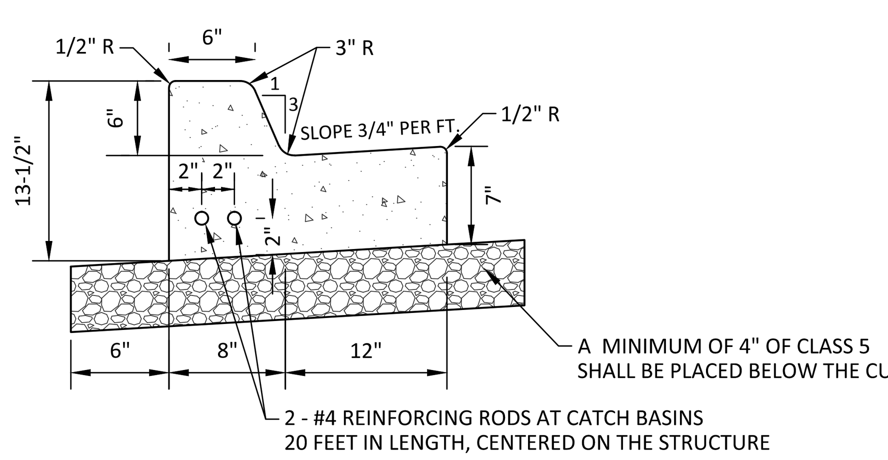

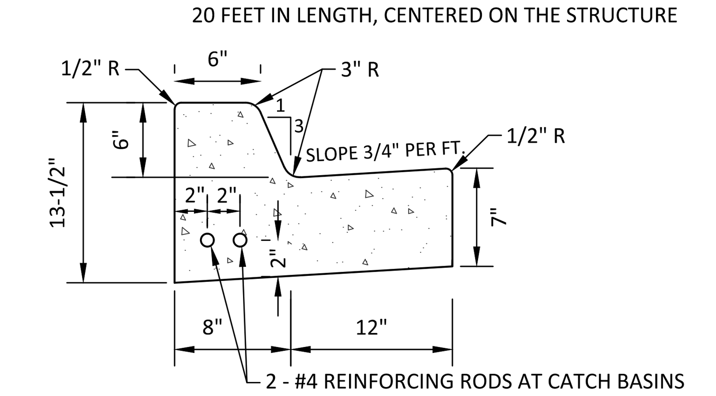

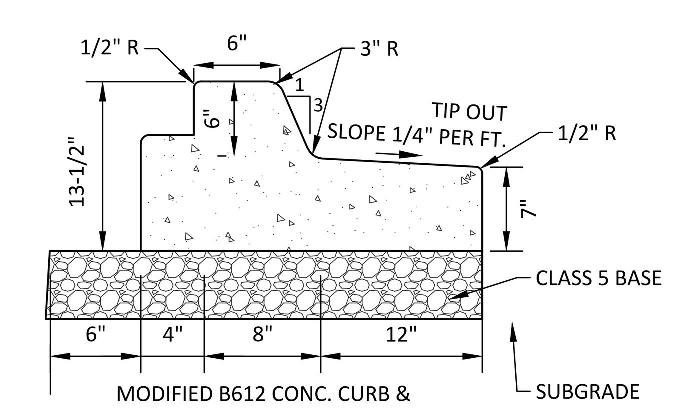

MODIFIED B612 CONC. CURB & GUTTER (ALONG SIDEWALK)

08 B612 CONCRETE CURB & GUTTER
N.T.S.

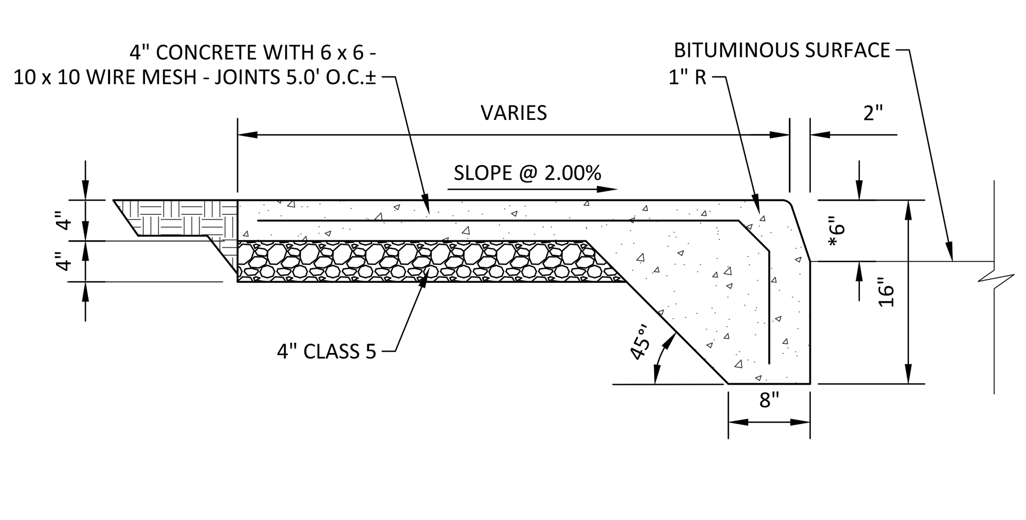

* HEIGHT VARIES - SEE GRADING PLAN

09 INTEGRAL SIDEWALK CURB
N.T.S.

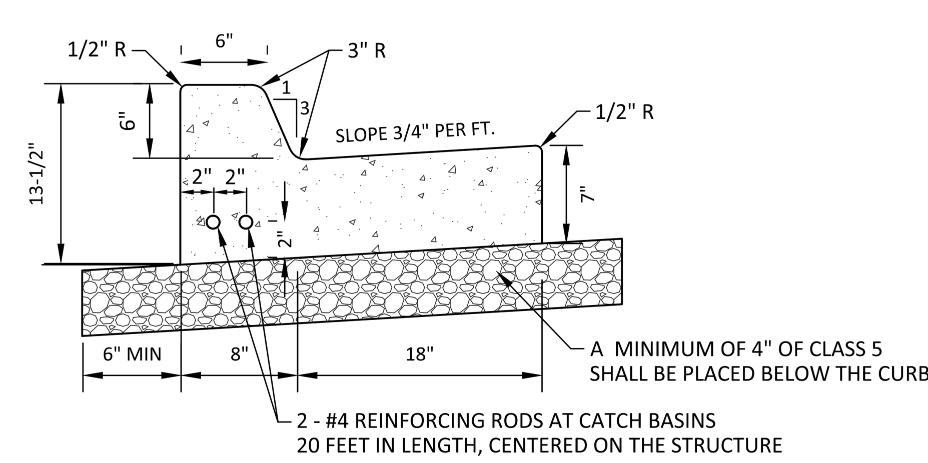

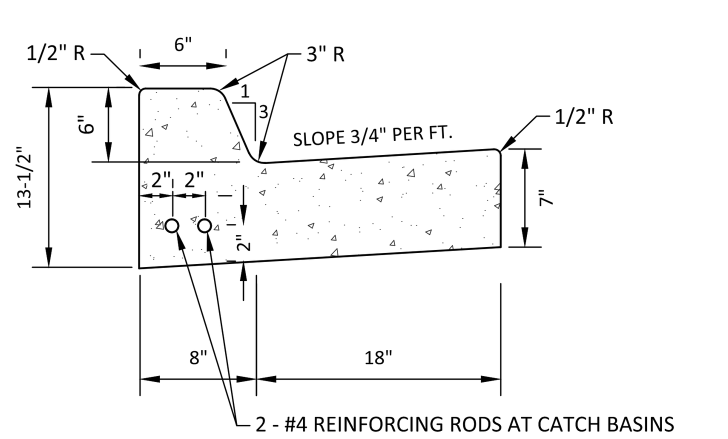

10 B618 CONCRETE CURB & GUTTER
N.T.S.

Sambatek
www.sambatek.com
12800 Whitewater Drive, Suite 300
Minnetonka, MN 55343
763.476.6010 telephone
763.476.8532 facsimile
Engineering | Surveying | Planning | Environmental

Client
ROBERT ST INVESTORS, LLLP
VENTURE PASS PARTNERS LLC
A DEVELOPMENT COMPANY

Project
LOTHENBACH/ ROBERT ST COMMERCIAL REDEVELOPMENT

Location
WEST ST. PAUL, MN

Certification
I hereby certify that this plan, specification or report was prepared by me or under my direct supervision and that I am a duly licensed professional ENGINEER under the laws of the state of Minnesota.

Michael G. Bultman
Registration No. 50860 Date: 04/22/2016
If applicable, contact us for a wet signed copy of this plan which is available upon request at Sambatek's, Minnetonka, MN office.

NOT FOR CONSTRUCTION

Summary
Designed: MGB Drawn:
Approved: Book / Page:
Phase: PRELIMINARY Initial Issue: 04/22/2016

Revision History

No.	Date	By	Submittal / Revision
	4/22/16		CITY SUBMITTAL
	5/6/16		REVISED CITY SUBMITTAL

Sheet Title
DETAIL SHEET

Sheet No. Revision
C7.01

Project No. CON20491

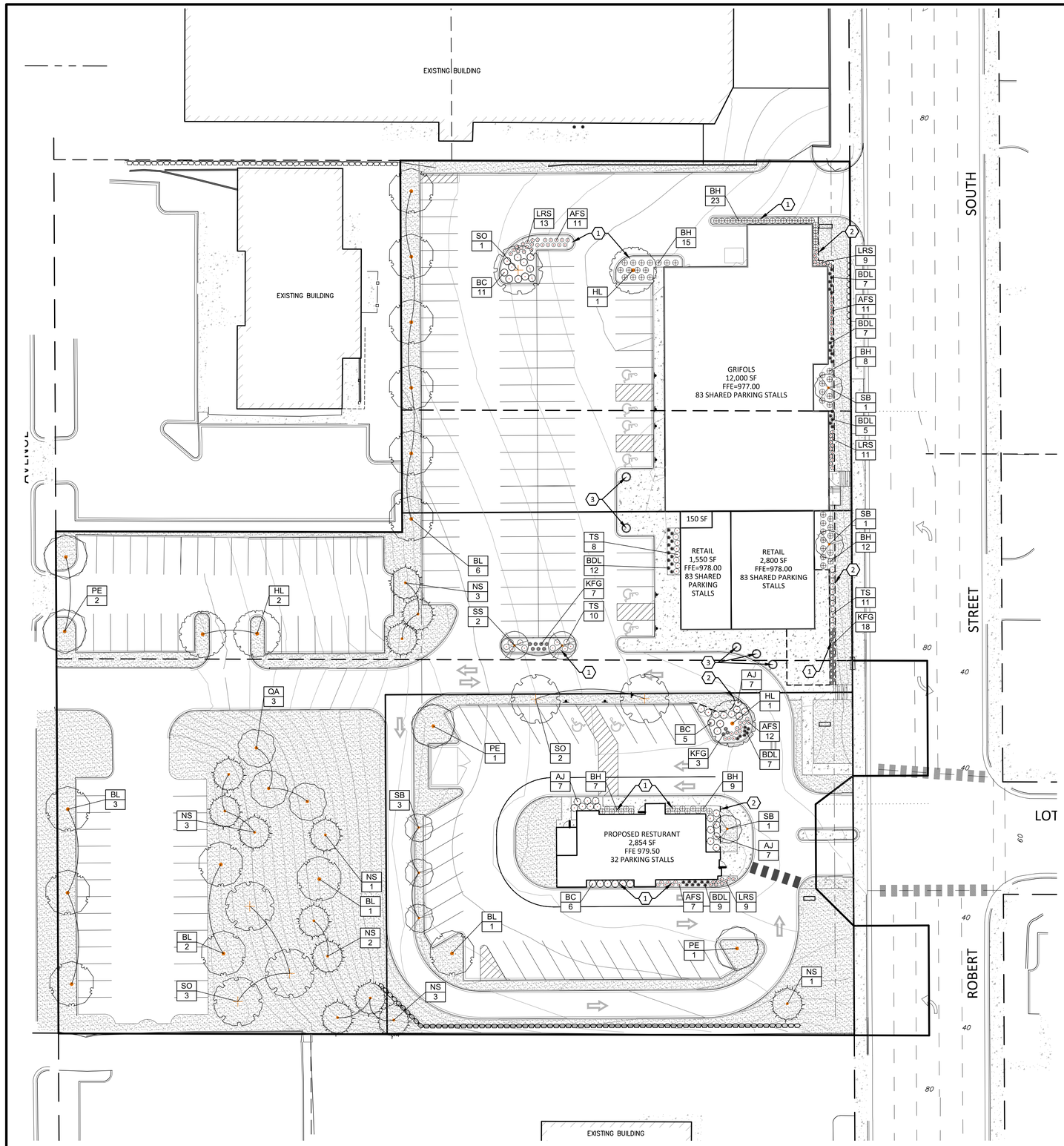

PLANT SCHEDULE

TREES	CODE	BOTANICAL NAME / COMMON NAME	CONT	CAL	SIZE	QTY
	HL	Gleditsia triacanthos `Skyline` / Skyline Honey Locust	B & B	2.5"Cal		4
	QA	Populus tremuloides / Quaking Aspen	B & B	2.5"Cal		3
	SO	Quercus bicolor / Swamp White Oak	B & B	2.5"Cal		6
	BL	Tilia americana `Boulevard` / Boulevard Linden	B & B	2.5"Cal		13
	PE	Ulmus americana `Princeton` / American Elm	B & B	2.5"Cal		4
CONIFERS	**CODE**	**BOTANICAL NAME / COMMON NAME**	**CONT**	**CAL**	**SIZE**	**QTY**
	NS	Picea abies / Norway Spruce	B & B		6`	13
ORN. TREES	**CODE**	**BOTANICAL NAME / COMMON NAME**	**CONT**	**CAL**	**SIZE**	**QTY**
	SB	Amelanchier canadensis `Autumn Brilliance` / Autumn Brilliance Serviceberry	B & B	2"Cal		5
	SS	Malus x `Spring Snow` / Spring Snow Crab Apple	B & B	2"Cal		2
SHRUBS	**CODE**	**BOTANICAL NAME / COMMON NAME**	**CONT**			**QTY**
	BC	Aronia melanocarpa `Autumn Magic` / Autumn Magic Black Chokeberry	5 gal			22
	BH	Diervilla lonicera / Dwarf Bush Honeysuckle	5 gal			74
	AJ	Juniperus horizontalis `Compacta` / Andorra Compact Juniper	5 gal			21
	TS	Spiraea betulifolia `Tor` / Birchleaf Spirea	5 gal			29
GRASSES	**CODE**	**BOTANICAL NAME / COMMON NAME**	**CONT**			**QTY**
	KFG	Calamagrostis x acutiflora `Karl Foerster` / Feather Reed Grass	1 gal			28
PERENNIALS	**CODE**	**BOTANICAL NAME / COMMON NAME**	**CONT**			**QTY**
	BDL	Hemerocallis x `Baja` / Baja Daylily	1 gal			47
	LRS	Perovskia atriplicifolia `Little Spire` TM / Little Spire Russian Sage	1 gal			42
	AFS	Sedum x `Autumn Fire` / Autumn Fire Sedum	1 gal			41
GROUND COVERS	**CODE**	**BOTANICAL NAME / COMMON NAME**	**QTY**			
	TUR HIG	Turf Sod Highland Sod / Sod	40,267 sf			

LANDSCAPE LEGEND

1. 3/4" DRESSER TRAP ROCK
2. STEEL EDGER
3. ARCHITECTURAL PLANTER TBD

CITY LANDSCAPE CODE

TREE PRESERVATION:

"REPLACEMENT TREES WILL CONSIST OF 30% OF THE TOTAL AMOUNT OF CALIPER INCHES OF QUALITY TREES (2.5" @ 4').

TOTAL QUALITY TREES AFFECTED: 59
TOTAL CALIPER INCHES REMOVED: 352
CALIPER INCHES NEEDED FOR REPLACEMENT: 106

LANDSCAPE CODE:

ONE TREE REQUIRED PER 40 LINEAR FEET OF PROPERTY LINE.

PROPERTY PERIMETER: 1800.3 LF
TOTAL TREES REQUIRED: 45
TOTAL NEW TREES PROPOSED: 50

NORTH

0 30 60
SCALE IN FEET

Sambatek
www.sambatek.com
12800 Whitewater Drive, Suite 300
Minnetonka, MN 55343
763.476.6010 telephone
763.476.8532 facsimile
Engineering | Surveying | Planning | Environmental

Client
ROBERT ST INVESTORS, LLLP

VENTURE PASS PARTNERS LLC
A DEVELOPMENT COMPANY

Project
LOTHENBACH/ ROBERT ST COMMERCIAL REDEVELOPMENT

Location
WEST ST. PAUL, MN

Certification

I hereby certify that this survey, plan or report was prepared by me or under my direct supervision and that I am a duly Licensed LANDSCAPE ARCHITECT under the laws of the State of Minnesota.

NOT FOR CONSTRUCTION

Joshua J. McKinney
Registration No. 51234 Date: 04/DD/2016

This certificate is not valid unless wet signed in blue ink. If any questions, contact us for a wet signed copy of this sheet which is available upon request at Sambatek, Minnetonka, MN office.

Summary

Designed: AAA Drawn: AAA
Approved: AAA Book / Page:
Phase: PRELIMINARY Initial Issue: 04/22/2016

Revision History

No.	Date By	Submittal / Revision
	4/22/16	CITY SUBMITTAL
	5/6/16	REVISED CITY SUBMITTAL

Sheet Title
LANDSCAPE PLAN

Sheet No. Revision
L1.01

Project No. CON20491

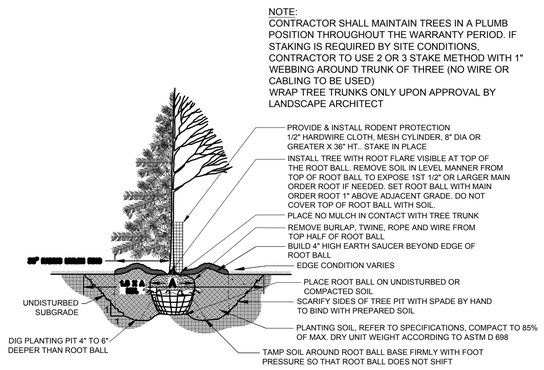

1 L1.02 TREE PLANTING DETAIL

NTS

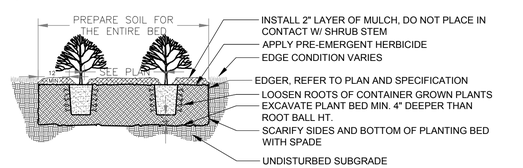

2 L1.02 SHRUB PLANTING DETAIL2

NTS

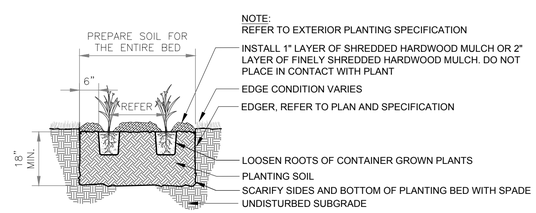

3 L1.02 PERENNIAL PLANTING DETAIL

NTS

NOTES

GENERAL NOTES:

1. THE CONTRACTOR SHALL INSPECT THE SITE AND BECOME FAMILIAR WITH THE EXISTING CONDITIONS RELATING TO THE NATURE AND SCOPE OF THE WORK.
2. THE CONTRACTOR SHALL VERIFY PLAN LAYOUT AND BRING TO THE ATTENTION OF THE LANDSCAPE ARCHITECT DISCREPANCIES WHICH MAY COMPROMISE THE DESIGN OR INTENT OF THE LAYOUT.
3. THE CONTRACTOR SHALL BE RESPONSIBLE FOR COMPLYING WITH ALL APPLICABLE CODES, REGULATIONS, AND PERMITS GOVERNING THE WORK.
4. THE CONTRACTOR SHALL PROTECT EXISTING ROADS, CURBS/GUTTERS, TRAILS, TREES, LAWNS AND SITE ELEMENTS DURING CONSTRUCTION. DAMAGE TO SAME SHALL BE REPAIRED AND/OR REPLACED AT NO ADDITIONAL COST TO THE OWNER.
5. LOCATE AND VERIFY ALL UTILITIES, INCLUDING IRRIGATION LINES, WITH THE OWNER FOR PROPRIETARY UTILITIES AND GOPHER STATE ONE CALL 48 HOURS BEFORE DIGGING. CONTRACTOR SHALL BE RESPONSIBLE FOR THE PROTECTION AND REPAIR OF ANY DAMAGES TO SAME. NOTIFY THE LANDSCAPE ARCHITECT OF ANY CONFLICTS TO FACILITATE PLANT RELOCATION.
6. **THE LANDSCAPE CONTRACTOR SHALL COORDINATE THE PHASES OF CONSTRUCTION AND PLANTING INSTALLATION WITH OTHER CONTRACTORS WORKING ON SITE.**
7. THE CONTRACTOR SHALL REVIEW THE SITE FOR DEFICIENCIES IN SITE CONDITIONS WHICH MIGHT NEGATIVELY AFFECT PLANT ESTABLISHMENT, SURVIVAL OR WARRANTY. UNDESIRABLE SITE CONDITIONS SHALL BE BROUGHT TO THE ATTENTION OF THE LANDSCAPE ARCHITECT PRIOR TO BEGINNING OF WORK.
8. THE PLAN TAKES PRECEDENCE OVER THE LANDSCAPE LEGEND IF DISCREPANCIES EXIST. QUANTITIES SHOWN IN THE PLANTING SCHEDULE ARE FOR THE CONTRACTOR'S CONVENIENCE. CONTRACTOR TO VERIFY QUANTITIES SHOWN ON THE PLAN.
9. THE SPECIFICATIONS TAKE PRECEDENCE OVER THE PLANTING NOTES AND GENERAL NOTES.
10. EXISTING TREES AND SHRUBS TO REMAIN SHALL BE PROTECTED TO THE DRIP LINE FROM ALL CONSTRUCTION TRAFFIC, STORAGE OF MATERIALS ETC. WITH 4' HT. ORANGE PLASTIC SAFETY FENCING EQUATELY SUPPORTED BY STEEL FENCE POSTS 6' O.C. MAXIMUM SPACING.
11. LONG-TERM STORAGE OF MATERIALS OR SUPPLIES ON-SITE WILL NOT BE ALLOWED.
12. CONTRACTOR SHALL REQUEST IN WRITING, A FINAL ACCEPTANCE INSPECTION.

PLANTING NOTES:

1. NO PLANTS SHALL BE INSTALLED UNTIL FINAL GRADING AND CONSTRUCTION HAS BEEN COMPLETED IN THE IMMEDIATE AREA.
2. A GRANULAR PRE-EMERGENT HERBICIDE SHALL BE APPLIED TO ALL PLANT BEDS AT THE MANUFACTURERS RECOMMENDED RATE PRIOR TO PLANT INSTALLATION.
3. ALL PLANTING STOCK SHALL CONFORM TO THE "AMERICAN STANDARD FOR NURSERY STOCK," ANSI-Z60, LATEST EDITION, OF THE AMERICAN ASSOCIATION OF NURSERYMEN, INC. AND SHALL CONSTITUTE MINIMUM QUALITY REQUIREMENTS FOR PLANT MATERIALS.
4. OVERSTORY TREES SHALL BEGIN BRANCHING NO LOWER THAN 6' ABOVE PAVED SURFACES.
5. ALL PLANTS MUST BE HEALTHY, VIGOROUS MATERIAL, FREE OF PESTS AND DISEASE AND BE CONTAINER GROWN OR BALLED AND BURLAPPED AS INDICATED IN THE LANDSCAPE LEGEND.
6. PLANT MATERIALS TO BE INSTALLED PER PLANTING DETAILS.
7. ALL TREES MUST BE STRAIGHT TRUNKED AND FULL HEADED AND MEET ALL REQUIREMENTS SPECIFIED.
8. THE LANDSCAPE ARCHITECT RESERVES THE RIGHT TO REJECT ANY PLANTS WHICH ARE DEEMED UNSATISFACTORY BEFORE, DURING, OR AFTER INSTALLATION.
9. NO SUBSTITUTIONS OF PLANT MATERIAL SHALL BE ACCEPTED UNLESS APPROVED IN WRITING BY THE LANDSCAPE ARCHITECT.
10. ALL PLANT MATERIAL QUANTITIES, SHAPES OF BEDS AND LOCATIONS SHOWN ARE APPROXIMATE. CONTRACTOR SHALL BE RESPONSIBLE FOR COMPLETE COVERAGE OF ALL PLANTING BEDS AT SPACING SHOWN AND ADJUSTED TO CONFORM TO THE EXACT CONDITIONS OF THE SITE. THE LANDSCAPE ARCHITECT SHALL APPROVE THE STAKING LOCATION OF ALL PLANT MATERIALS PRIOR TO INSTALLATION.
11. ALL PLANTING AREAS MUST BE COMPLETELY MULCHED AS SPECIFIED.
12. MULCH: SHREDDED HARDWOOD MULCH, CLEAN AND FREE OF NOXIOUS WEEDS OR OTHER DELETERIOUS MATERIAL, IN ALL MASS PLANTING BEDS AND FOR TREES, UNLESS INDICATED AS ROCK MULCH ON DRAWINGS. SUBMIT SAMPLE TO LANDSCAPE ARCHITECT PRIOR TO DELIVERY ON-SITE FOR APPROVAL. DELIVER MULCH ON DAY OF INSTALLATION. USE 4" FOR SHRUB BEDS, AND 3" FOR PERENNIAL/GROUND COVER BEDS, UNLESS OTHERWISE DIRECTED.
13. THE CONTRACTOR SHALL BE RESPONSIBLE FOR ALL MULCHES AND PLANTING SOIL QUANTITIES TO COMPLETE THE WORK SHOWN ON THE PLAN.
14. USE ANTI-DESICCANT (WILTPRUF OR APPROVED EQUAL) ON DECIDUOUS PLANTS MOVED IN LEAF AND FOR EVERGREENS MOVED ANYTIME. APPLY AS PER MANUFACTURER'S INSTRUCTION. ALL EVERGREENS SHALL BE SPRAYED IN THE LATE FALL FOR WINTER PROTECTION DURING WARRANTY PERIOD.
14. PLANTING SOIL FOR TREES, SHRUBS AND GROUND COVERS: FERTILE FRIABLE LOAM CONTAINING A LIBERAL AMOUNT (4% MIN.) OF HUMUS AND CAPABLE OF SUSTAINING VIGOROUS PLANT GROWTH. IT SHALL COMPLY WITH MNDOT SPECIFICATION 3877 TYPE B SELECT TOPSOIL. MIXTURE SHALL BE FREE FROM HARDPACK SUBSOIL, STONES, CHEMICALS, NOXIOUS WEEDS, ETC. SOIL MIXTURE SHALL HAVE A PH BETWEEN 6.1 AND 7.5 AND 10-0-10 FERTILIZER AT THE RATE OF 3 POUNDS PER CUBIC YARD. IN PLANTING BEDS INCORPORATE THIS MIXTURE THROUGHOUT THE ENTIRE BED IN A 6" LAYER AND ROTO-TILLING IT INTO THE TOP 12" OF SOIL AT A 1:1 RATIO.ANY PLANT STOCK NOT PLANTED ON DAY OF DELIVERY SHALL BE HEELED IN AND WATERED UNTIL INSTALLATION. PLANTS NOT MAINTAINED IN THIS MANNER WILL BE REJECTED.
15. ALL PLANTS SHALL BE GUARANTEED FOR TWO COMPLETE GROWING SEASONS (APRIL 1 - NOVEMBER 1), UNLESS OTHERWISE SPECIFIED. THE GUARANTEE SHALL COVER THE FULL COST OF REPLACEMENT INCLUDING LABOR AND PLANTS.
16. CONTRACTOR SHALL NOTIFY THE LANDSCAPE ARCHITECT AT LEAST 3 DAYS PRIOR TO PLANNED DELIVERY. THE CONTRACTOR SHALL NOTIFY THE LANDSCAPE ARCHITECT AT LEAST 24 HOURS IN ADVANCE OF BEGINNING PLANT INSTALLATION.
17. SEASONS/TIME OF PLANTING AND SEEDING: NOTE: THE CONTRACTOR MAY ELECT TO PLANT IN OFF-SEASONS ENTIRELY AT HIS/HER RISK. DECIDUOUS
    - 17.1. POTTED PLANTS: 4/1 - 6/1; 9/21 - 11/1
    - 17.2. DECIDUOUS /B&B: 4/1 - 6/1; 9/21 - 11/1
    - 17.3. EVERGREEN POTTED PLANTS: 4/1 - 6/1; 9/21-11/1
    - 17.4. EVERGREEN B&B: 4/1 - 5/1; 9/21 - 11/1
    - 17.5. TURF/LAWN SEEDING: 4/1 - 6/1; 7/20 - 9/20
18. MAINTENANCE SHALL BEGIN IMMEDIATELY AFTER EACH PORTION OF THE WORK IS IN PLACE. PLANT MATERIAL SHALL BE PROTECTED AND MAINTAINED UNTIL THE INSTALLATION OF THE PLANTS IS COMPLETE, INSPECTION HAS BEEN MADE, AND PLANTINGS ARE ACCEPTED EXCLUSIVE OF THE GUARANTEE. MAINTENANCE SHALL INCLUDE WATERING, CULTIVATING, MULCHING, REMOVAL OF DEAD MATERIALS, RE-SETTING PLANTS TO PROPER GRADE AND KEEPING PLANTS IN A PLUMB POSITION. AFTER ACCEPTANCE, THE OWNER SHALL ASSUME MAINTENANCE RESPONSIBILITIES. HOWEVER, THE CONTRACTOR SHALL CONTINUE TO BE RESPONSIBLE FOR KEEPING THE TREES PLUMB THROUGHOUT THE GUARANTEE PERIOD.
19. ANY PLANT MATERIAL WHICH DIES, TURNS BROWN, OR DEFOLIATES (PRIOR TO TOTAL ACCEPTANCE OF THE WORK) SHALL BE PROMPTLY REMOVED FROM THE SITE AND REPLACED WITH MATERIAL OF THE SAME SPECIES, QUANTITY, AND SIZE AND MEETING ALL LANDSCAPE LEGEND SPECIFICATIONS.
20. WATERING: MAINTAIN A WATERING SCHEDULE WHICH WILL THOROUGHLY WATER ALL PLANTS ONCE A WEEK. IN EXTREMELY HOT, DRY WEATHER, WATER MORE OFTEN AS REQUIRED BY INDICATIONS OF HEAT STRESS SUCH AS WILTING LEAVES. CHECK MOISTURE UNDER MULCH PRIOR TO WATERING TO DETERMINE NEED. CONTRACTOR SHALL MAKE THE NECESSARY ARRANGEMENTS FOR WATER.

TURF NOTES:

TURF ESTABLISHMENT SHALL BE ACCOMPLISHED IN ACCORDANCE WITH THE PROVISIONS OF THE MN/DOT 2105 AND 2575 EXCEPT AS MODIFIED BELOW:

1. ALL AREAS TO RECEIVE SOD SHALL ALSO RECEIVE 4" OF TOPSOIL PRIOR TO INSTALLING SOD. TOPSOIL SHALL BE FREE OF TREE ROOTS, STUMPS, BUILDING MATERIAL, AND TRASH, AND SHALL BE FREE OF STONES LARGER THAN 1 $\frac{1}{2}$" INCHES IN ANY DIMENSION.
2. WHERE SOD ABUTS PAVED SURFACES, FINISHED GRADE OF SOD/SEED SHALL BE HELD 1" BELOW SURFACE ELEVATION OF TRAIL, SLAB, CURB, ETC.
3. SOD SHALL BE LAID PARALLEL TO THE CONTOURS AND SHALL HAVE STAGGERED JOINTS. ON SLOPES STEEPER THAN 3:1 OR IN DRAINAGE SWALES, SOD SHALL BE STAKED SECURELY.
4. ALL DISTURBED AREAS TO BE TURF SEEDED, ARE TO RECEIVE 4" TOP SOIL, SEED, MULCH, AND WATER UNTIL A HEALTHY STAND OF GRASS IS OBTAINED. FOR SLOPES STEEPER THAN 3:1 OR IN DRAINAGE SWALES INSTALL EROSION CONTROL BLANKET.
5. ALL DISTURBED AREAS TO RECEIVE NATIVE SEED, ARE TO RECEIVE PLANTING SOIL, SEED, MULCH, AND WATER UNTIL A HEALTHY STAND OF GRASS IS OBTAINED. FOR SLOPES STEEPER THAN 3:1 OR IN DRAINAGE SWALES INSTALL EROSION CONTROL BLANKET.

IRRIGATION NOTES:

1. IRRIGATION SYSTEM TO BE DESIGN/BUILD. CONTRACTOR TO SUBMIT SHOP DRAWINGS FOR APPROVAL OF SYSTEM LAYOUT PRIOR TO INSTALLATION.
2. ALL SOD TO RECEIVE SPRAY OR ROTOR IRRIGATION HEADS WITH MINIMUM DESIGN OF 1" IRRIGATION PER WEEK.
3. ALL PLANT BEDS TO RECEIVE DRIP LINE IRRIGATION , WITH A MINIMUM DESIGN OF .25" IRRIGATION PER WEEK.
4. CONTRACTOR TO INSTALL A TOTAL OF 4 QUICK COUPLERS AT THE CORNERS OF THE PROPERTY. A 2.5" TYPE K SOURCE PIPE IS PROVIDED BY MECHANICAL.

Sambatek
www.sambatek.com
12800 Whitewater Drive, Suite 300
Minnetonka, MN 55343
763.476.6010 telephone
763.476.8532 facsimile
Engineering | Surveying | Planning | Environmental

Client
ROBERT ST INVESTORS, LLLP

VENTURE PASS PARTNERS LLC
A DEVELOPMENT COMPANY

Project
LOTHENBACH/ ROBERT ST COMMERCIAL REDEVELOPMENT

Location
WEST ST. PAUL, MN

Certification

I hereby certify that this survey, plan or report was prepared by me or under my direct supervision and that I am a duly Licensed LANDSCAPE ARCHITECT under the laws of the State of Minnesota.

NOT FOR CONSTRUCTION

Josh McKinney

Joshua J. McKinney
Registration No. 51234 Date: 04/DD/2016

This certificate is not valid unless wet signed in blue ink. If and only if, contact us for a wet signed copy of this survey, which is available upon request at Sambatek, Minnetonka, MN office.

Summary

Designed: AAA Drawn: AAA
Approved: AAA Book / Page:
Phase: PRELIMINARY Initial Issue: 04/22/2016

Revision History

No.	Date	By	Submittal / Revision
	4/22/16		CITY SUBMITTAL
	5/6/16		REVISED CITY SUBMITTAL

Sheet Title
LANDSCAPE DETAILS

Sheet No. Revision
L1.02

Project No. CON20491

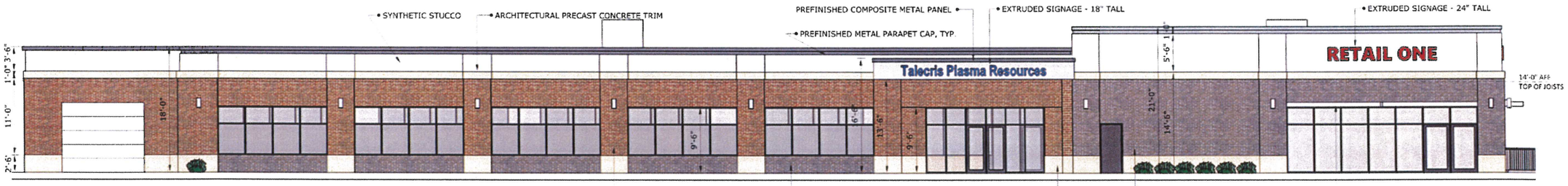

1 A2.0 WEST ELEVATION
1/8" = 1'-0"

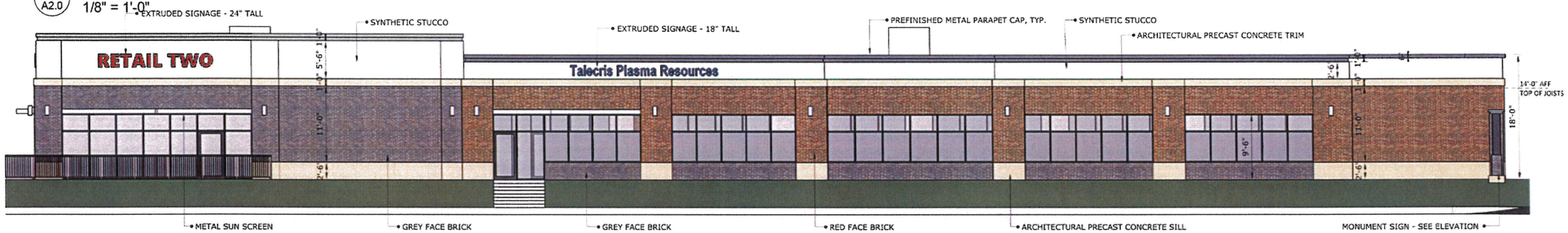

2 A2.0 EAST ELEVATION
1/8" = 1'-0"

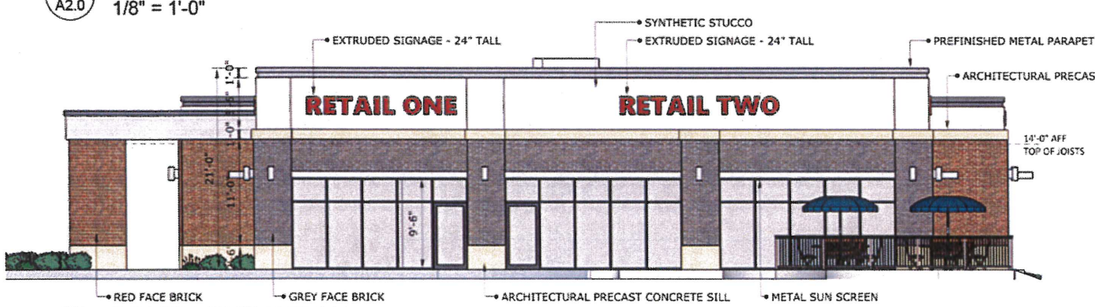

3 A2.0 SOUTH ELEVATION
1/8" = 1'-0"

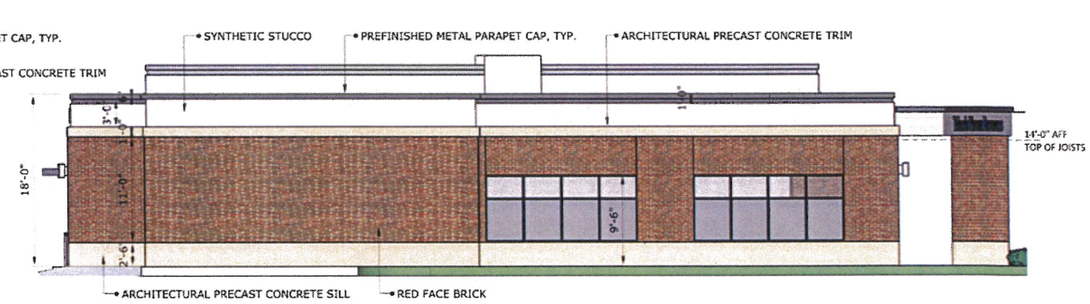

4 A2.0 NORTH ELEVATION
1/8" = 1'-0"

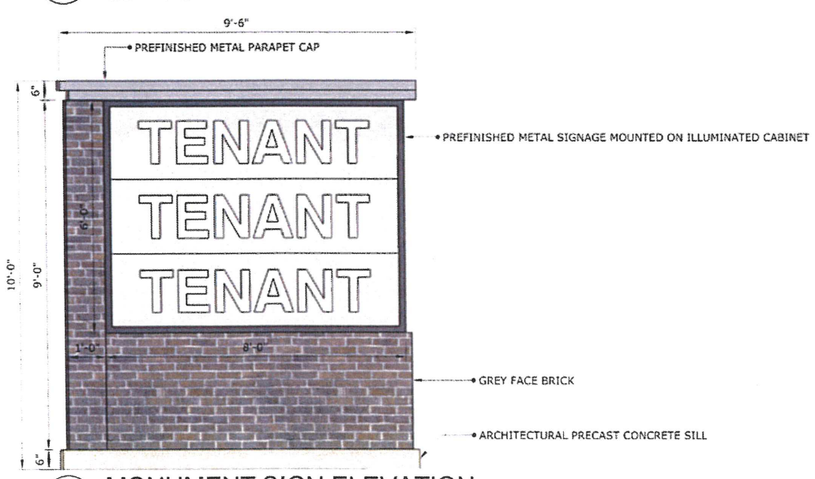

5 A2.0 MONUMENT SIGN ELEVATION
1/2" = 1'-0"

MATERIAL FINISH SCHEDULE

PRIMARY
BRICK
PRECAST CONCRETE
GLASS

SECONDARY
SYNTHETIC STUCCO
METAL

Lothenbach/Robert Street Commercial Redevelopment

WEST ST. PAUL, MINNESOTA

4-22-2016 | COMM#15525-16047

Robert Street Investors, LLLP

VENTURE PASS PARTNERS LLC
A DEVELOPMENT COMPANY

POPE ARCHITECTS

PERSPECTIVE 1

POPE ARCHITECTS

Lothenbach/Robert Street Commercial Redevelopment

WEST ST. PAUL, MINNESOTA

4-22-2016 | COMM#15525-16047

Robert Street Investors, LLLP

VENTURE PASS PARTNERS LLC
A DEVELOPMENT COMPANY

PERSPECTIVE 2

POPE ARCHITECTS

Lothenbach/Robert Street Commercial Redevelopment

WEST ST. PAUL, MINNESOTA

4-22-2016 | COMM#15525-16047

Robert Street Investors, LLLP

VENTURE PASS PARTNERS LLC
A DEVELOPMENT COMPANY

PERSPECTIVE 3

POPE ARCHITECTS

Lothenbach/Robert Street Commercial Redevelopment

WEST ST. PAUL, MINNESOTA

4-22-2016 | COMM#15525-16047

Robert Street Investors, LLLP

VENTURE PASS PARTNERS LLC
A DEVELOPMENT COMPANY

PERSPECTIVE 4

POPE ARCHITECTS

Lothenbach/Robert Street Commercial Redevelopment

WEST ST. PAUL, MINNESOTA

4-22-2016 | COMM#15525-16047

Robert Street Investors, LLLP

VENTURE PASS PARTNERS LLC
A DEVELOPMENT COMPANY

PERSPECTIVE 5

POPE ARCHITECTS

Lothenbach/Robert Street Commercial Redevelopment

WEST ST. PAUL, MINNESOTA

4-22-2016 | COMM#15525-16047

Robert Street Investors, LLLP

VENTURE PASS PARTNERS LLC
A DEVELOPMENT COMPANY

01 | FRONT ELEVATION
1/4"= 1'-0"
01:A4.1

02 | FRONT TOWER PROFILE
1/4"= 1'-0"
02:A4.1

MATERIALS PERCENTAGES

%	SQUARE FT.	MATERIAL
100%	850 SF	TOTAL FACADE
12%	106 SF	BRICK
68%	579 SF	STUCCO
17%	141 SF	GLAZING
3%	24 SF	DOORS

MATERIALS LEGEND

SWATCH USED	MATERIAL
	BRICK MASONRY
	STUCCO
	CLEAR GLAZING
	METAL PANEL MATTE BLACK

MATERIALS PERCENTAGES

%	SQUARE FT.	MATERIAL
100%	1620 SF	TOTAL FACADE
66%	868 SF	BRICK
26%	336 SF	STUCCO
8%	133 SF	GLAZING
0%	0 SF	DOORS

MATERIALS LEGEND

SWATCH USED	MATERIAL
	BRICK MASONRY
	STUCCO
	CLEAR GLAZING
	METAL PANEL MATTE BLACK

03 | DRIVE-THRU ELEVATION
1/4"= 1'-0"
03:A4.1

Raising Cane's Chicken Fingers
Restaurant Support Office
6800 Bishop Road, Plano, TX 75024
Tele: 972-769-3100 Fax: 972-769-3101

Prototype Issue Date: 15-1001

Store:

Raising Cane's
W. St. Paul
Minnesota
Prototype 4 w/ Vestibule
Store #268

Professional of Record: Chris J Pellegrin

Designer's Information:

CSRS
IMAGINE SHAPE DELIVER
6767 Perkins Road Suite 200 Baton Rouge, LA 70808
Telephone: 225 769-0546 Fax: 225 767-0060
www.csrsonline.com

Set Control Information: (ARCH use only)
Setup / Update Date: 12-1215 | YY-MMDD

#	Date:	Description:
1	1-6-2016	Permit Set
2	3-15-2016	Construction Set

FOR CONSTRUCTION

Sheet Revisions: (sheet specific per Designer)

#	Date:	Description:

Sheet Title:

EXTERIOR ELEVATIONS

Initial sheet issue date: 160421
Project Number: ---
Project Manager: ---

Sheet Number:

A04.1

P:\216000\RC 268 West St. Paul, MN\04 Drawings\Renderings\Rendering with vestibules\ Prototype 4 rendering with vestibule.dwg Apr 26, 2016 - 1:39pm

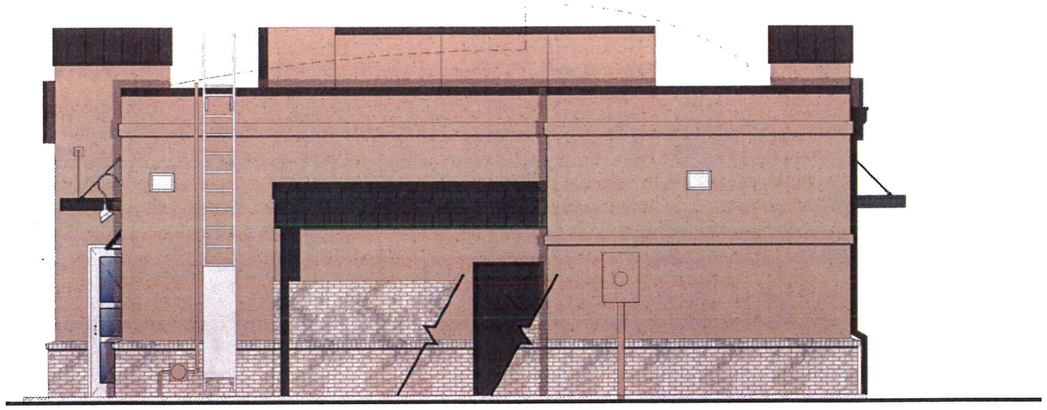

01 | REAR ELEVATION
1/4"= 1'-0"

MATERIALS PERCENTAGES

%	SQUARE FT.	MATERIAL
100%	850 SF	TOTAL FACADE
20%	175 SF	BRICK
79%	662 SF	STUCCO
0%	0 SF	GLAZING
1%	13 SF	DOORS

MATERIALS LEGEND

SWATCH USED	MATERIAL
	BRICK MASONRY
	STUCCO
	CLEAR GLAZING
	METAL PANEL MATTE BLACK

02 | SIDE ELEVATION
1/4"= 1'-0"
02:A4.2

MATERIALS PERCENTAGES

%	SQUARE FT.	MATERIAL
100%	1629 SF	TOTAL FACADE
16%	263 SF	BRICK
59%	1190 SF	STUCCO
23%	153 SF	GLAZING
2%	23 SF	DOORS

MATERIALS LEGEND

SWATCH USED	MATERIAL
	BRICK MASONRY
	STUCCO
	CLEAR GLAZING
	METAL PANEL MATTE BLACK

Raising Cane's Chicken Fingers
Restaurant Support Office
6800 Bishop Road, Plano, TX 75024
Tele: 972-769-3100 Fax: 972-769-3101

Prototype Issue Date: 15-1001

Store:

Raising Cane's
Street Name
City, State
Prototype 4 with Vestibule
Store #

Professional of Record: Chris J Pellegrin

Designer's Information:

CSRS
IMAGINE SHAPE DELIVER
6767 Perkins Road Suite 200 Baton Rouge, LA 70808
Telephone: 225 769-0546 Fax: 225 767-0060
www.csrsonline.com

Set Control Information: (ARCH use only)

Setup / Update Date: 12-1215 | YY-MMDD

#	Date:	Description:
1	1-6-2016	Permit Set
2	3-15-2016	Construction Set

FOR CONSTRUCTION

Sheet Revisions: (sheet specific per Designer)

#	Date:	Description:

Sheet Title:

EXTERIOR ELEVATIONS

Initial sheet issue date: 160421

Project Number: ---

Project Manager: ---

Sheet Number:

A04.2

P:\216000\RC 268 West St. Paul, MN\04 Drawings\Renderings\Rendering with vestibules\ Prototype 4 rendering with vestibule.dwg Apr 26, 2016 - 1:39pm

Luminaire Schedule							
Symbol	Qty	Label	Arrangement	LLF	Description	Arr. Watts	Lum. Lumens
	4	AA	SINGLE	0.900	MCGRAW GLEON-AE-06-LED-E1-5WQ MOUNT ON 20FT POLE WITH 30IN BASE	315	32327
	2	BB	SINGLE	0.900	MCGRAW GLEON-AE-04-LED-E1-T3 MOUNT ON 20FT POLE WITH 30IN BASE	213	20704
	1	CC	SINGLE	0.900	MCGRAW GLEON-AE-01-LED-E1-SL4-HSS MOUNT ON 20FT POLE WITH 30IN BASE	56	4361
	3	DD	SINGLE	0.900	MCGRAW GLEON-AE-04-LED-E1-SL4-HSS MOUNT ON 20FT POLE WITH 30IN BASE	213	16800
	1	FF	SINGLE	0.900	MCGRAW GLEON-AE-01-LED-E1-T3 WALL MOUNT AT 12FT	56	5374
	11	GG	SINGLE	0.900	LUMARK XTOR2A WALL MOUNT AT 8FT	18	1635

Calculation Summary							
Label	CalcType	Units	Avg	Max	Min	Avg/Min	Max/Min
PROPERTY LINE LIVINGSTON - EXC	Illuminance	Fc	0.00	0.0	0.0	N.A.	N.A.
PROPERTY LINE ROBERT ST-EXC	Illuminance	Fc	0.12	2.0	0.0	N.A.	N.A.
SITE GROUND	Illuminance	Fc	1.14	10.7	0.0	N.A.	N.A.
PARKING NORTH	Illuminance	Fc	1.80	3.9	0.7	2.57	5.57
PARKING SOUTH	Illuminance	Fc	2.28	10.7	0.6	3.80	17.83

Luminaire Location Summary						
LumNo	Label	X	Y	Z	Orient	Tilt
24	AA	560956.4	254419.9	22.5	0	0
25	AA	560964.8	254299.1	22.5	0	0
29	BB	560824.3	254217.8	22.5	270	0
33	AA	561038	254174.3	22.5	0	0
34	DD	560964.0	254021.2	22.5	90	0
35	DD	561055.8	254023.5	22.5	90	0
36	AA	560908.4	254164.9	22.5	0	0
37	BB	560906	254097.3	22.5	180	0
43	DD	561112.7	254088.6	22.5	180	0
46	FF	561093.3	254446.2	12	90	0
48	CC	561032.6	254477.2	22.5	270	0
49	GG	561037.3	254363.2	8	180	0
50	GG	561037.3	254335.1	8	180	0
51	GG	561046.3	254245.5	8	180	0
52	GG	561046.2	254269.9	8	180	0
53	GG	561037.3	254393.8	8	180	0
54	GG	561067.1	254426.3	8	90	0
55	GG	561068.8	254086	8	0	0
56	GG	561026.8	254115.4	8	180	0
57	GG	560986.7	254106.8	8	90	0
58	GG	561127	254301.9	8	0	0
59	GG	561099.6	254230.7	8	270	0

TYPE AA, BB, CC, DD, & FF - MCGRAW GLEON SERIES

TYPE GG - LUMARK CROSSTOUR SERIES

GENERAL NOTES:

A. PULSE PRODUCTS DOES NOT ASSUME RESPONSIBILITY FOR THE INTERPRETATION OF THIS CALCULATION OR COMPLAINCE TO THE LOCAL, STATE, OR FEDERAL LIGHTNG CODES OR ORDINANCES.

B. LIGHTING LAYOUT IS NOT INTENDED FOR CONSTRUCTION DOCUMENTS BUT ONLY TO ILLUSTRATE THE PERFORMANCE OF THE PRODUCT.

C. ALL READINGS/CALCULATIONS SHOWN ARE SHOWN ON OBJECTS/SURFACES.

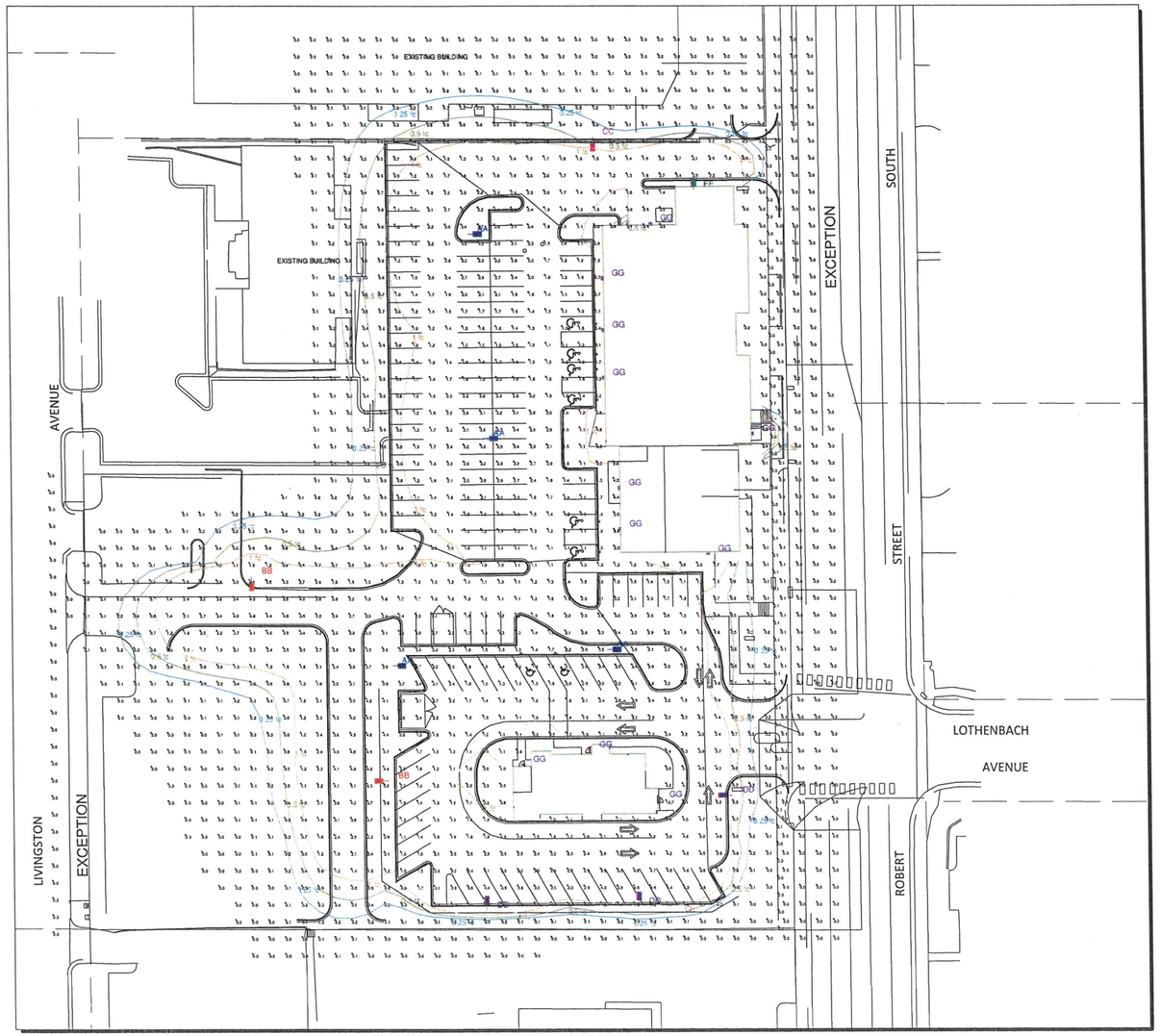

Plan View
Scale: 1 inch= 40 Ft.

PULSE never ordinary

#	Date	Comments

Revisions

Drawn By: SANDY
Checked By: TRENT
Date:4/22/2016

Scale: AS NOTED

WEST ST. PAUL RETAIL

LEGEND

- FOUND MONUMENT
- SET MONUMENT MARKED LS 21729
- GATE VALVE / HYDRANT
- SANITARY MANHOLE
- CLEAN OUT
- STORM MANHOLE
- STORM CATCH BASIN
- TRANSFORMER
- LIGHT
- GUY ANCHOR
- UTILITY POLE
- GUARD POST
- SIGN
- GAS METER
- GAS MANHOLE
- ELECTRIC MANHOLE
- ELECTRIC METER
- TELEPHONE PEDESTAL
- CABLE TV BOX
- COMMUNICATIONS MANHOLE
- BOUNDARY LINE
- RIGHT-OF-WAY LINE
- UNDERLYING / ADJACENT LOT
- BUILDING SETBACK LINE
- SECTION LINE
- WATERMAIN
- SANITARY SEWER
- STORM SEWER
- UNDERGROUND ELECTRIC
- UNDERGROUND GAS
- OVERHEAD ELECTRIC
- METAL FENCE
- RETAINING WALL
- BLOCK RETAINING WALL
- EASEMENT LINE
- TREE LINE
- CONCRETE CURB
- BUILDING LINE
- BUILDING CANOPY
- BITUMINOUS SURFACE
- CONCRETE SURFACE
- BRICK SURFACE
- DECIDUOUS TREE
- CONIFEROUS TREE
- 902.5 SPOT ELEVATION
- CONTOUR
- REGULAR PARKING STALL COUNT
- TRAFFIC MARKERS

VICINITY MAP

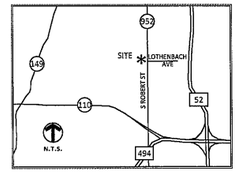

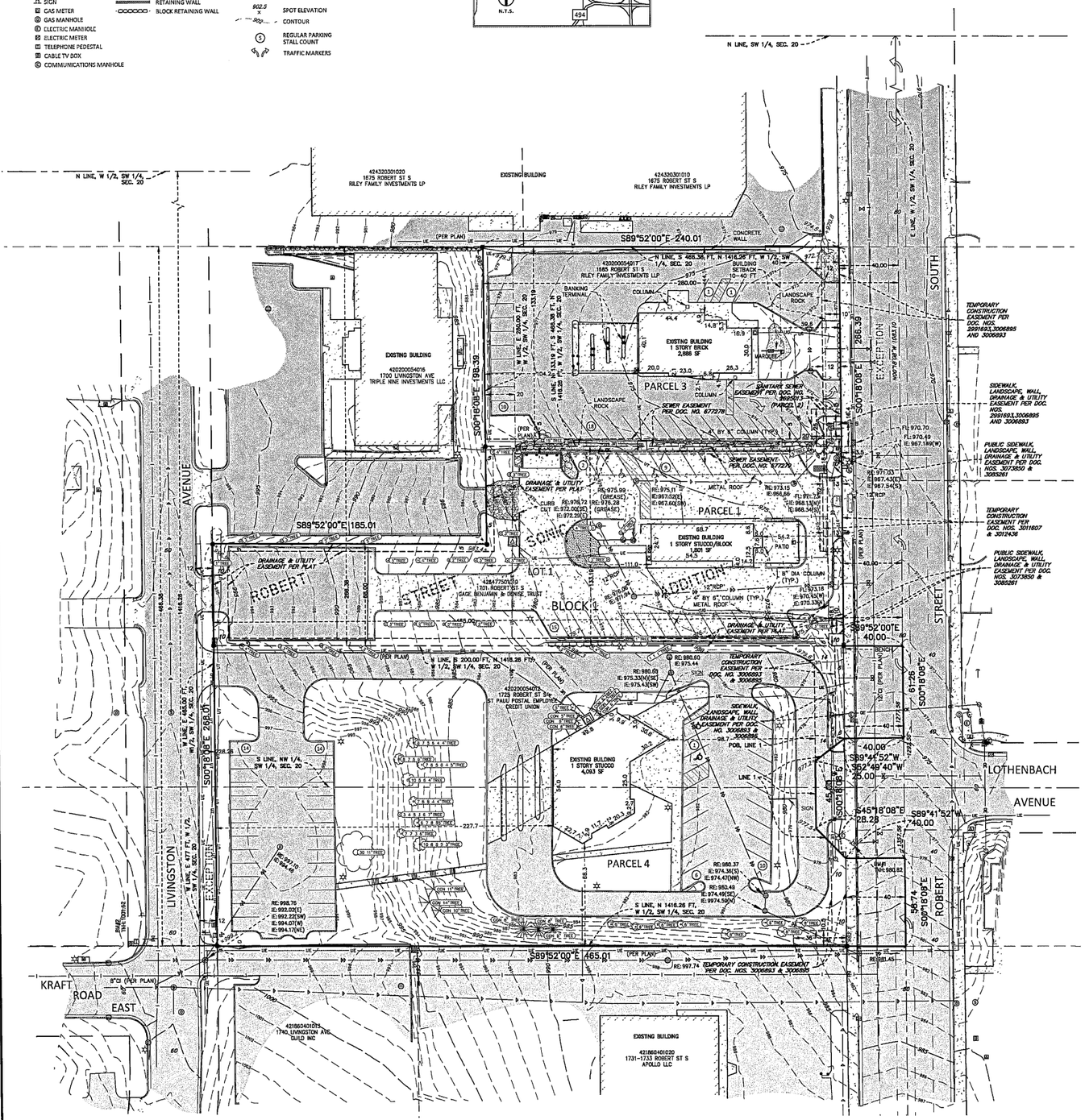

SURVEY NOTES

1. The bearing system is based on an assumed bearing of South 89 degrees 52 minutes 00 seconds East for the south line of the north 1416.26 feet of the West Half of the Southwest Quarter, Section 20, Township 28, Range 22.
2. The vertical datum is based on NAVD88. The originating bench marks are MNDOT BUICK and MNDOT FORD, both referenced from the MnDOT Geodetic Database.

   BENCHMARK #1
   Top nut of hydrant at south east corner of surveyed property. Elev.=980.82

   BENCHMARK #2
   Top nut of hydrant at southwest corner of surveyed property. Elev.=1001.52
3. Subject property's addresses and property identification numbers are:

Parcel 3:	1685 Robert Street S	420200054017
Parcel 1:	1701 Robert Street S	42047750110
Parcel 4:	1725 Robert Street S	420200054012

4. The fieldwork for this survey was conducted while the subject property was under the cover of a significant amount of ice and snow; all features visible under these conditions are shown on the survey.
5. There appear to be several electric underground lines crossing the subject property and serving buildings on Parcels 3 and 1 without the benefit of an easement.

SUBJECT PROPERTY

Parcel 3:

Description from title commitment:

The East 280 feet of the North 133.19 feet of the North 266.38 feet of the South 466.38 feet of the North 1416.26 feet of the East 477 feet of the West One-Half of the Southwest One-Quarter of Section 20, Township 28, Range 22, except the East 40 feet taken for Robert Street.
Dakota County, Minnesota
Abstract Property

The following comments, regarding easements etc. that the surveyed property is subject to, reference Schedule B, Part 2 of Title Commitment No. 51053, dated 03/01/2016, that Commercial Partners Title, LLC as agent for Old Republic National Title Insurance Company has provided us. The comments use the same numbering system as in said Part 2. Exception Items No's. 1-8 are not **survey related items.**

9. Terms and conditions of Easement Agreement dated November 5, 1984, filed January 28, 1985, as Document No. 677278. **Easement is shown on the survey.**
10. Terms and conditions of Sanitary Sewer Easement Agreement dated November 24, 2008, filed December 2, 2008, as Document No. 3625013. **Easement is shown on the survey.**
11. Terms and conditions of Encroachment Easement dated October 31, 2013, filed December 31, 2013, as Document No. 3992671. **Easement does not affect the surveyed property; it is not shown on the survey.**
12. Temporary easement for construction purposes and easement for public sidewalk, landscape, wall, drainage and utility purposes in favor of the City of West St. Paul, acquired in Condemnation, as evidenced by Notice of Lis Pendens filed December 23, 2013, as Document No. 3991693; Order filed April 11, 2014, as Document No. 3006895; and Receipt of Deposit filed April 11, 2014, as Document No. 3006893. **The Document No. 3991693 as provided to the surveyor is a Lis Pendens and does not create any easements; easements are shown as defined by Doc Nos. 3006895 and 3006893.**

Parcels 1 and 2:

Description from title commitment:

Parcel 1:
Lot 1, Block 1, Robert Street Sonic Addition, Dakota County, Minnesota.
Abstract Property

Parcel 2:
Non-exclusive easement for sanitary sewer purposes as contained in Sanitary Sewer Easement Agreement dated November 24, 2008, filed December 2, 2008, as Document No. 3625013.

The following comments, regarding easements etc. that the surveyed property is subject to, reference Schedule B, Part 2 of Title Commitment No. 51054, dated 03/02/2016, that Commercial Partners Title, LLC as agent for Old Republic National Title Insurance Company has provided us. The comments use the same numbering system as in said Part 2. **Exception Items No's. 1-8 and 18 are not survey related items.**

9. Easements for utilities and drainage as shown on the recorded plat of Robert Street Sonic Addition. **Easements are shown on the survey.**
10. Easement for sewer purposes, for the benefit of adjacent property to the North, as created in document dated October 17, 1984, filed January 28, 1985, as Document No. 677279. **Easement is shown on the survey.**
11. Minutes in Case #08-04, a Variance Approval for Five Variances adopted September 16, 2008, filed December 2, 2008, as Document No. 3625008. **Document affects all of Parcel 1.**
12. Resolution No. 08-100, approving Site Plan for a Lot Combination adopted September 22, 2008, filed December 2, 2008, as Document No. 3625009. Amended by Resolution No. 08-107 approving a site plan amendment adopted October 27, 2008, filed November 14, 2008, as Document No. 3622897. **Documents affect all of Parcel 1.**
13. Resolution No. 08-99, approving Conditional Use Permit adopted September 22, 2008, filed December 2, 2008, as Document No. 3625011. **Document affects all of Parcel 1.**
14. Terms and conditions of and easements contained in Sanitary Sewer Easement Agreement dated November 24, 2008, filed December 2, 2008, as Document No. 3625013. Easement benefits Parcel 1; it is shown on the survey.
15. Temporary easements for construction purposes, in favor of the City of West St. Paul, as created in document dated March 26, 2014, filed May 16, 2014, as Document No. 3011607, and filed May 23, 2014, as Document No. 3012436. Easements expire no later than November 15, 2017. **Easements are shown on the survey.**
16. Notice of Lis Pendens to acquire perpetual easement for public sidewalk, landscape, wall, drainage and utility purposes dated June 18, 2015, filed June 19, 2015, as Document No. 3073850. Plaintiff is the City of West St. Paul, a Minnesota municipal corporation. Court File Number is 19HA-CV-15-1858. Receipt of Deposit dated August 13, 2015, filed August 18, 2015, as Document No. 3085261. No Final Certificate or Order Transferring Title and Possession appears of record. **Easements are shown on the survey.**
17. Subject to the following matters as shown on the survey prepared by Loucks Associates dated July 1, 2008, last revised September 25, 2008:
    A. There is a curb cut between the land and adjacent property to the West and North.
    B. A bench encroaches onto the Southeast corner of the land.
    Curb cut and bench are shown on the survey.

Parcel 4:

Description from title commitment:

South 200 feet of North 1416.26 feet of East 477 feet of the West Half of the Southwest Quarter of Section Twenty (20), Township Twenty Eight (28), Range Twenty Two (22), Dakota County, Minnesota, EXCEPTING therefrom the West 12 feet thereof;
AND
EXCEPTING that part thereof lying Easterly of Line 1 described below:

Line 1:
From a point on the East line of the West Half of the Southwest Quarter of said Section 20, distant 1277.56 feet South of the Northeast corner thereof, run Westerly at right angles to the East line of said West Half of the Southwest Quarter to an intersection with the Westerly right of way line of said Trunk Highway No. 52 which is the point of beginning of Line 1 to be described; thence run Southwesterly to a point distant 60 feet Westerly (Measured at right angles) of a point on the East line of said West Half of the Southwest Quarter, distant 1292.56 feet South of the Northeast corner of said West Half of the Southwest Quarter; thence run Southerly parallel with the East line of said West Half of the Southwest Quarter for 45 feet; thence run Southeasterly to the point of intersection of the Westerly right of way line of said Trunk Highway No. 52 with a line run Westerly at right angles to the East line of said West Half of the Southwest Quarter from a point thereon distant 1357.56 feet South of the Northeast corner of said West Half of the Southwest Quarter and there terminating, according to the Government Survey thereof.
Dakota County, Minnesota
Abstract Property

The following comments, regarding easements etc. that the surveyed property is subject to, reference Schedule B, Part 2 of Title Commitment No. 40364, dated 06/12/2015, that Commercial Partners Title, LLC as agent for Stewart Title Guaranty Company has provided us. The comments use the same numbering system as in said Part 2. **Exception Items No's. 1-10 are not survey related items.**

11. Easement for sidewalk, landscape, wall, drainage and utility and construction purposes, in favor of the city of West St. Paul, as contained in document dated April 4, 2014, filed April 11, 2014, as Document No. 3006893, and in document dated March 28, 2014, filed April 11, 2014, as Document No. 3006895. **Easement, as well as temporary construction easements described in said documents, are shown on the survey.**

"TABLE A" NOTES

3. The subject property lies within Flood Plain Zone X – 'Area of minimal flood hazard', per FEMA, FIRM Map Panel 27123C0114G (Flood map not printed) dated 06/04/2010.
4. The gross land area of the subject property is 3.789 Acres or 165,066 Square Feet.

6a. **The zoning information has not been provided by the client.** The subject property is zoned B-3 General Business, per West St. Paul online zoning map as of 03/22/2016. Per city code of the City of West St. Paul, setback requirements, height and floor space area restrictions and parking requirements for properties zoned B-3 are as follows:

Minimum Setbacks:					
Building	Front:	10-40 ft	Parking	Front:	Not Permitted
	Side:	0 ft		Side:	0 ft
	Side adjacent to "R":	10 ft		Side adjacent to "R":	10 ft
	Side adjacent to street:	10-30 ft		Side adjacent to street:	10 ft
	Rear:	20 ft		Rear:	10 ft

6b. Building setback lines for Parcel 3 are shown on the survey. Setback requirements for Parcels 1 and 4 require an interpretation by the surveyor; a zoning report or letter has not been provided to the surveyor by the client.

7a. The buildings and exterior dimensions of the outside wall at ground level are shown on the survey. It may not be the foundation wall.
    b. The square footage of the buildings is shown on the survey.

8. Substantial features observed in the process of conducting the fieldwork are shown on the survey.
9. The parking areas and striping on the subject property are shown. There are 4 handicap parking stalls, and there are 101 regular parking stalls for a total of 105 parking stalls.
11. Underground utilities are per a combination of the following:
    a) Observed evidence,
    b) Evidence from plans requested by the surveyor and obtained from utility companies, or provided by client (with reference as to the sources of information), and
    c) Markings requested by the surveyor from Gopher State One-Call, Ticket Nos. 160360557, 160360558, 160360559.

    A Gopher State One Call (GSOC) request was placed on 02/05/2016 for utility locates on this site. The underground utility locations, shown hereon, if any, are based upon locates from those utility providers that actually performed a locate as a result of this request. Utility suppliers often do not respond to these requests but may provide ambiguous maps, plans, and drawings in lieu of physical location. The surveyor makes no guarantees that the underground utilities shown comprise all such utilities in the area, either in service or abandoned. Utility information shown hereon, if any, is a compilation of this map information and those visible utilities that were located during the survey field work. The surveyor further does not warrant that the underground utilities shown hereon, if any, are in the exact location as indicated, although he does certify that they are located as accurately as possible from information available. The surveyor has not physically located the underground utilities. Pursuant to MS 216.D contact Gopher State One Call at (651-454-0002) prior to any excavation.
13. The names of adjoining owners according to current tax records are shown on the survey.

CERTIFICATION

To Condor Corporation; Robert Street Investors, LLLP; Riley Family Investments, LLP, a Minnesota limited liability partnership; The Benjamin and Denise Gage Trust dated June 27, 1990; St. Paul Postal Employees Credit Union, a Minnesota credit union; Commercial Partners Title, LLC; Old Republic National Title Insurance Company and Stewart Title Guaranty Company:

This is to certify that this map or plat and the survey on which it is based were made in accordance with the 2016 Minimum Standard Detail Requirements for ALTA/NSPS Land Title Surveys, jointly established and adopted by ALTA and NSPS, and includes Items 1, 2, 3, 4, 6(a), 6(b), 7(a), 7(b)(1), 8, 9, 11 and 13 of Table A thereof. The field work was completed on 02/18/2016.

Dated this 29th day of March, 2016.

Sambatek, Inc.

Rick M. Bloom, LS
Minnesota License No. 21729
rbloom@sambatek.com

Sambatek
www.sambatek.com
12800 Whitewater Drive, Suite 300
Minnetonka, MN 55343
763.476.6010 telephone
763.476.8532 facsimile
Engineering | Surveying | Planning | Environmental

Client
CONDOR CORPORATION

Project
WEST ST. PAUL RETAIL ON ROBERT STREET

Location
WEST ST. PAUL, MN

Certification

Summary

Designed:	Drawn: DL
Approved: RMB	Book / Page: 1264/16
Phase:	Initial Issued: 03/25/2016

Revision History

No.	Date	By	Submittal / Revision
A	03/29/16	DL	Revised certification

Sheet Title
ALTA/NSPS LAND TITLE SURVEY

Sheet No. 1/1 **Revision** A

Project No. CON20491

ROBERT STREET RILEY ADDITION

KNOW ALL PERSONS BY THESE PRESENTS: That Robert Street Investors, LLLP, a Minnesota limited liability limited partnership, owner of the following described property situated in the County of Dakota, State of Minnesota:

The East 280 feet of the North 133.19 feet of the North 266.38 feet of the South 466.38 feet of the North 1,416.26 feet of the East 477 feet of the West One-Half of the Southwest One-Quarter of Section 20, Township 28, Range 22, except the East 40 feet taken for Robert Street.

TOGETHER WITH

Lot 1, Block 1, Robert Street Sonic Addition.

TOGETHER WITH

The south 200 feet of the north 1416.26 feet of the east 477 feet of the West Half of the Southwest Quarter of Section 20, Township 28, Range 22, Dakota County, Minnesota, EXCEPTING therefrom the west 12 feet thereof;
AND EXCEPTING that part thereof lying easterly of Line 1 described below:
Line 1:
From a point on the east line of the West Half of the Southwest Quarter of said Section 20, distant 1277.56 feet south of the northeast corner thereof, run westerly at right angles to the east line of said West Half of the Southwest Quarter to an intersection with the westerly right of way line of said Trunk Highway No. 52 which is the point of beginning of Line 1 to be described; thence run southwesterly to a point distant 60 feet westerly (Measured at right angles) of a point on the east line of said West Half of the Southwest Quarter, distant 1292.56 feet south of the northeast corner of said West Half of the Southwest Quarter; thence run southerly parallel with the east line of said West Half of the Southwest Quarter for 45 feet; thence run southeasterly to the point of intersection of the westerly right of way line of said Trunk Highway No. 52 with a line run westerly at right angles to the east line of said West Half of the Southwest Quarter from a point thereon distant 1357.56 feet south of the northeast corner of said West Half of the Southwest Quarter and there terminating, according to the Government Survey thereof.

Has caused the same to be surveyed and platted as ROBERT STREET RILEY ADDITION, and does hereby dedicate to the public for public use the public ways as created by this plat.

In witness whereof said Robert Street Investors, LLLP, a Minnesota limited liability limited partnership, has caused these presents to be signed by its proper officer this _____ day of _____, 20___.

SIGNED: _____

By: _____, as _____

STATE OF MINNESOTA
COUNTY OF _____

The foregoing instrument was acknowledged before me this _____ day of _____, 20___, by _____, as _____ of Robert Street Investors, LLLP, a Minnesota limited liability limited partnership, on behalf of the partnership.

_____ _____
Notary Public, _____ County, Minnesota Notary Printed Name
My Commission Expires _____

I Rick M. Blom do hereby certify that this plat was prepared by me or under my direct supervision; that I am a duly Licensed Land Surveyor in the State of Minnesota; that this plat is a correct representation of the boundary survey; that all mathematical data and labels are correctly designated on this plat; that all monuments depicted on this plat have been, or will be correctly set within one year; that all water boundaries and wet lands, as defined in Minnesota Statutes, Section 505.1, Subd. 3, as of the date of this certificate are shown and labeled on this plat; and all public ways are shown and labeled on this plat.

Dated this _____ day of _____, 20_____

_____
Rick M. Blom, Licensed Land Surveyor, Minnesota License No.21729

STATE OF MINNESOTA
COUNTY OF _____

The foregoing instrument was acknowledged before me this _____ day of _____, 20___, by Rick M. Blom.

_____ _____
Notary Public, _____ County, Minnesota Notary Printed Name
My Commission Expires _____

WEST ST. PAUL CITY COUNCIL

This plat was approved by the City of West St. Paul, Minnesota this _____ day of _____, 20_____, and hereby certifies compliance with all requirements as set forth in Minnesota Statues, Section 505.03, Subd. 2.

By: _____ By: _____
Mayor Clerk

DAKOTA COUNTY SURVEYOR

I hereby certify that in accordance with Minnesota Statutes, Section 505.021, Subd. 11, this plat has been reviewed and approved this _____ day of _____, 20_____.

By: _____
Todd B. Tollefson, Dakota County Surveyor

DAKOTA COUNTY BOARD

We do hereby certify that on the _____ day of _____, 20_____, the Board of Commissioners of Dakota County, Minnesota, approved this plat of ROBERT STREET RILEY ADDITION, and said plat is in compliance with the provisions of Minnesota Statues, Section 505.03, Subd. 2, and pursuant to the Dakota County Contiguous Plat Ordinance.

By:_____ Attest:_____
Chair, County Board County Treasurer-Auditor

DAKOTA COUNTY PROPERTY TAXATION AND RECORDS

Pursuant to Minnesota Statutes, Section 505.021, Subd. 9, taxes payable in the year 20_____ on the land hereinbefore described have been paid. Also pursuant to Minnesota Statutes, Section 272.12, there are no delinquent taxes and transfer entered this _____day of _____, 20_____.

By: _____
Director, Department of Property Taxation and Records

DAKOTA COUNTY RECORDER
I hereby certify that this plat of ROBERT STREET RILEY ADDITION was filed in the office of the County Recorder for public record on this _____ day of _____, 20_____, at _____ o'clock _____ .M., and was duly filed in Book_____ of Plats, Page_____ as Document Number _____.

By: _____
County Recorder

SAMBATEK, INC.
ENGINEERING, PLANNING
AND LAND SURVEYING

ROBERT STREET RILEY ADDITION

● DENOTES 1/2 INCH IRON MONUMENT MARKED BY LICENSE NO. 17255 FOUND, UNLESS OTHERWISE INDICATED.

○ DENOTES 1/2 INCH BY 18 INCH IRON MONUMENT MARKED BY LICENSE NO. 21729 SET.

⊙ DENOTES MAG NAIL SET.

THE ORIENTATION OF THIS BEARING SYSTEM IS BASED UPON THE SOUTH LINE OF THE NORTH 1416.26 FEET OF THE WEST HALF OF THE SOUTHWEST QUARTER, SEC. 20, T. 28, R. 22 HAVING AN ASSUMED BEARING OF SOUTH 89°52'00"EAST.

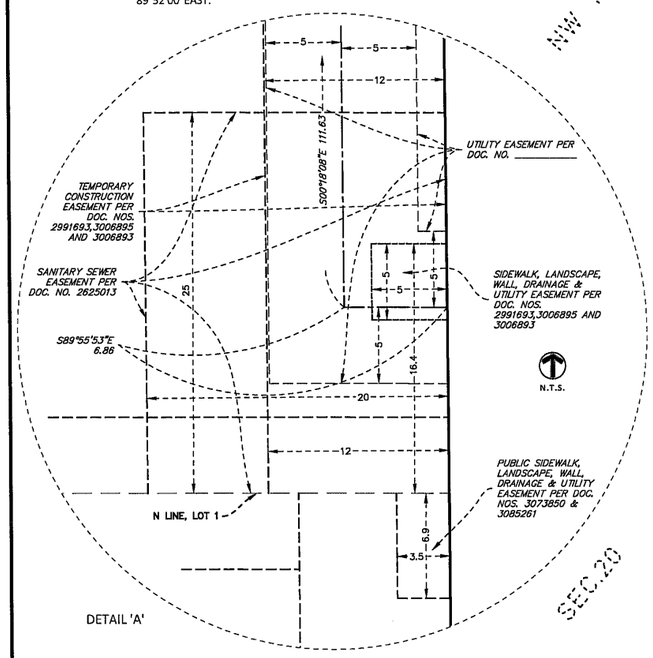

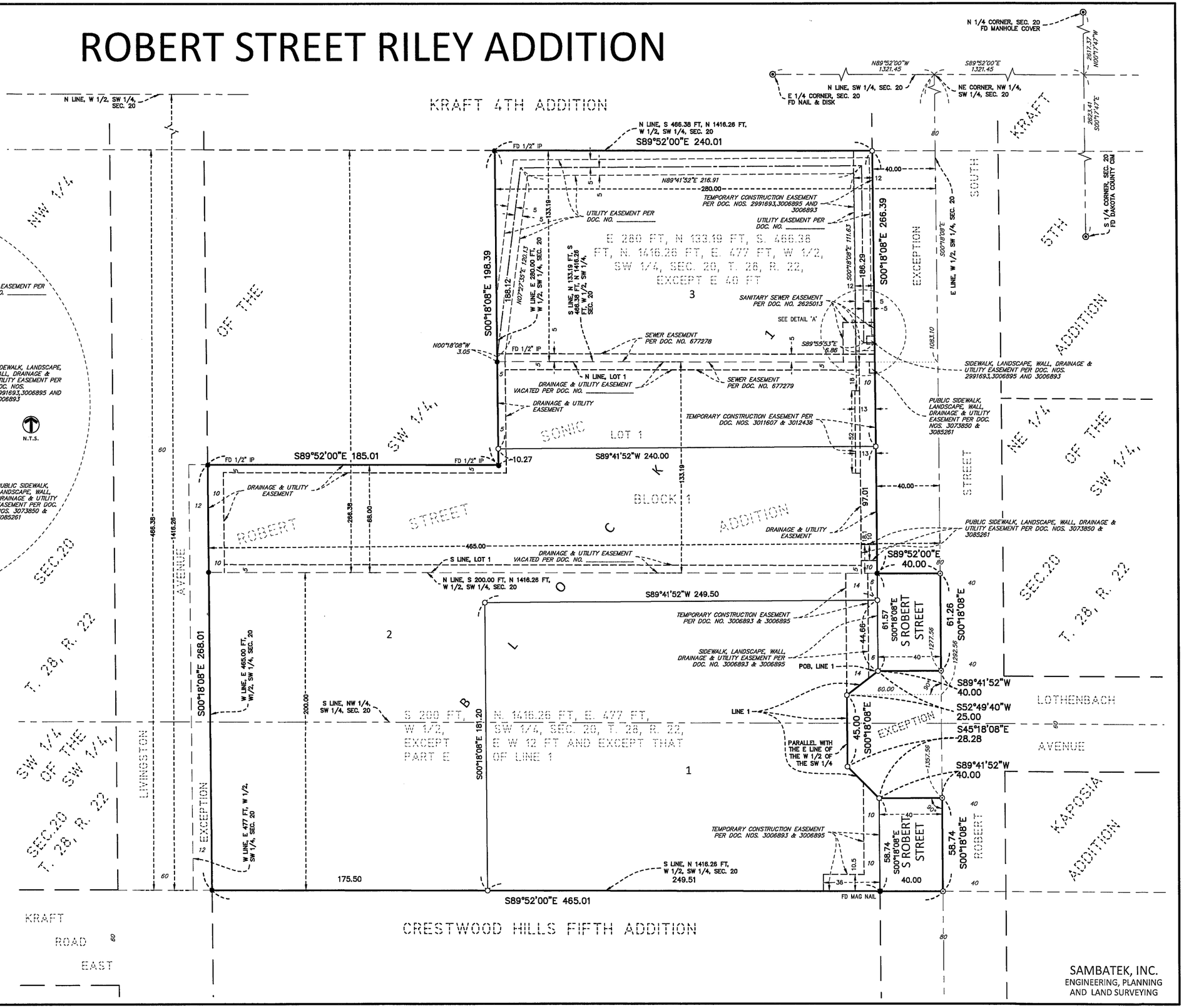

VICINITY MAP

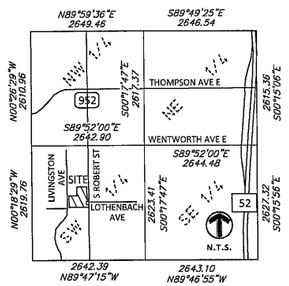

SECTION 20, TOWNSHIP 28, RANGE 22, DAKOTA COUNTY, MINNESOTA

SAMBATEK, INC.
ENGINEERING, PLANNING AND LAND SURVEYING

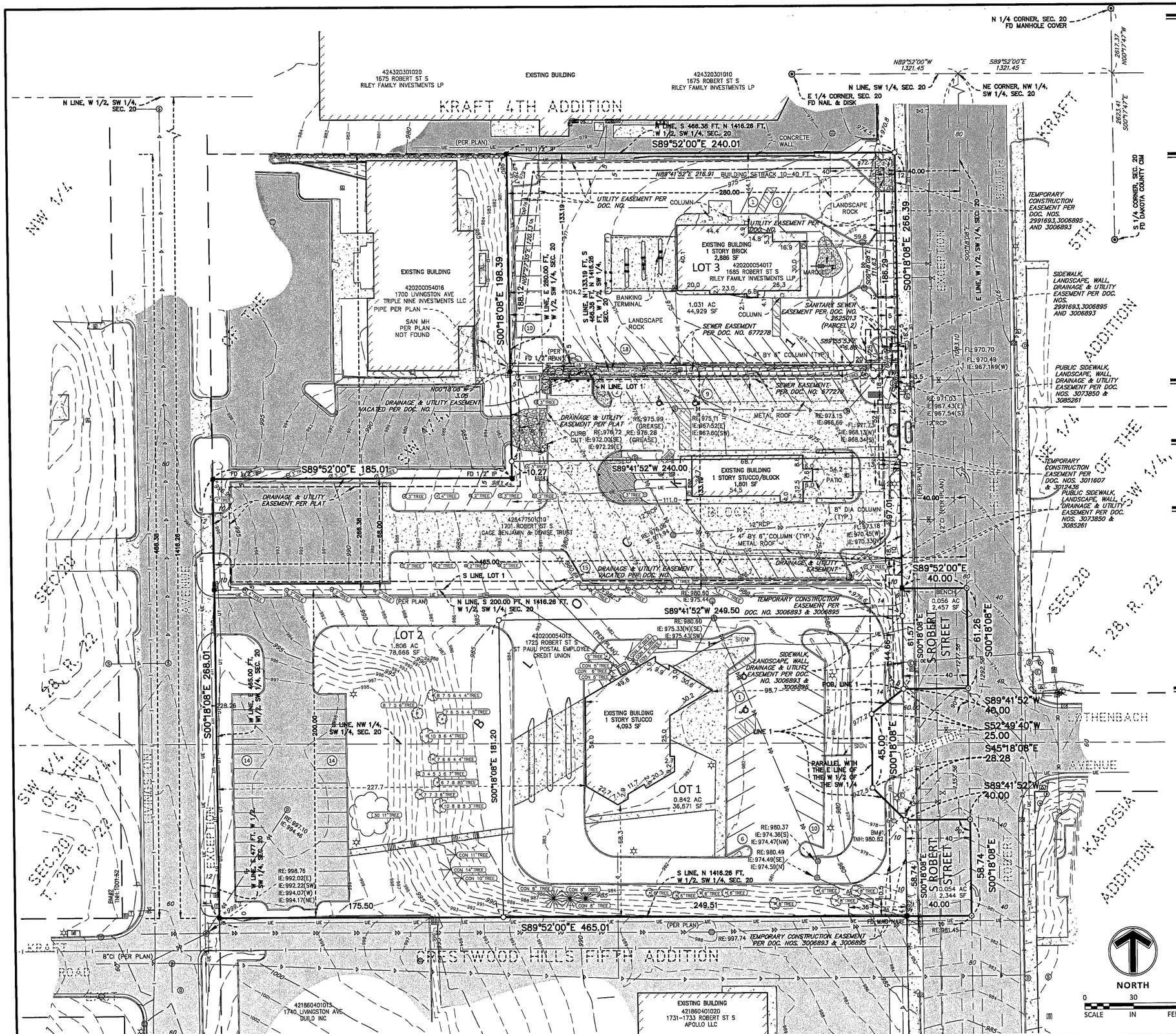

SURVEY NOTES

1. The bearing system is based on an assumed bearing of South 89 degrees 52 minutes 00 seconds East for the south line line of the north 1416.26 feet of the West Half of the Southwest Quarter, Section 20, Township 28, Range 22.
2. The vertical datum is based on NAVD88. The originating bench marks are MNDOT BUICK and MNDOT FORD, both referenced from the MnDOT Geodetic Database.

   BENCHMARK #1
   Top nut of hydrant at south east corner of surveyed property. Elev.=980.82

   BENCHMARK #2
   Top nut of hydrant at southwest corner of surveyed property. Elev.=1001.52
3. Subject property's addresses and property identification numbers are:

1685 Robert Street S	420200054017
1701 Robert Street S	426477501010
1725 Robert Street S	420200054012

DESCRIPTION

The East 280 feet of the North 133.19 feet of the North 266.38 feet of the South 466.38 feet of the North 1416.26 feet of the East 477 feet of the West One-Half of the Southwest One-Quarter of Section 20, Township 28, Range 22, except the East 40 feet taken for Robert Street.
Dakota County, Minnesota

TOGETHER WITH

Lot 1, Block 1, Robert Street Sonic Addition, Dakota County, Minnesota.

TOGETHER WITH

South 200 feet of North 1416.26 feet of East 477 feet of the West Half of the Southwest Quarter of Section Twenty (20), Township Twenty Eight (28), Range Twenty Two (22), Dakota County, Minnesota, EXCEPTING therefrom the West 12 feet thereof;
AND EXCEPTING that part thereof lying Easterly of Line 1 described below:
Line 1:
From a point on the East line of the West Half of the Southwest Quarter of said Section 20, distant 1277.56 feet South of the Northeast corner thereof, run Westerly at right angles to the East line of said West Half of the Southwest Quarter to an intersection with the Westerly right of way line of said Trunk Highway No. 52 which is the point of beginning of Line 1 to be described; thence run Southwesterly to a point distant 60 feet Westerly (Measured at right angles) of a point on the East line of said West Half of the Southwest Quarter, distant 1292.56 feet South of the Northeast corner of said West Half of the Southwest Quarter; thence run Southerly parallel with the East line of said West Half of the Southwest Quarter for 45 feet; thence run Southeasterly to the point of intersection of the Westerly right of way line of said Trunk Highway No. 52 with a line run Westerly at right angles to the East line of said West Half of the Southwest Quarter from a point thereon distant 1357.56 feet South of the Northeast corner of said West Half of the Southwest Quarter and there terminating, according to the Government Survey thereof.
Dakota County, Minnesota

SITE SETBACKS

Zone: B-3 General Business Minimum Building Setbacks:

Front:	10-40 ft
Side:	0 ft
Side adjacent to "R":	10 ft
Side adjacent to street:	10-30 ft
Rear:	20 ft

LOT SUMMARY

Lot 1, Block 1:	36,671 s.f.
Lot 2, Block 1:	78,666 s.f.
Lot 3, Block 1:	44,929 s.f.
S Robert Street	4,801 s.f.
Total Site Area:	165,067 s.f.

VICINITY MAP

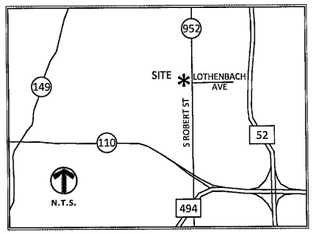

LEGEND

- FOUND MONUMENT
- SET MONUMENT MARKED LS 21729
- GATE VALVE / HYDRANT
- SANITARY MANHOLE
- CLEAN OUT
- STORM MANHOLE
- STORM CATCH BASIN
- TRANSFORMER
- LIGHT
- GUY ANCHOR
- UTILITY POLE
- GUARD POST
- SIGN
- GAS METER
- GAS MANHOLE
- ELECTRIC MANHOLE
- ELECTRIC METER
- TELEPHONE PEDESTAL
- CABLE TV BOX
- COMM. MANHOLE
- BOUNDARY LINE
- RIGHT-OF-WAY LINE
- UNDERLYING / ADJACENT LOT
- BUILDING SETBACK LINE
- SECTION LINE
- WATERMAIN
- SANITARY SEWER
- STORM SEWER
- UNDERGROUND ELECTRIC
- UNDERGROUND GAS
- OVERHEAD ELECTRIC
- METAL FENCE
- RETAINING WALL
- BLOCK RETAINING WALL
- EASEMENT LINE
- TREE LINE
- CONCRETE CURB
- BUILDING LINE
- BUILDING CANOPY
- BITUMINOUS SURFACE
- CONCRETE SURFACE
- BRICK SURFACE
- DECIDUOUS TREE
- CONIFEROUS TREE
- 902.5 SPOT ELEVATION
- 902 CONTOUR
- REGULAR PARKING STALL COUNT
- TRAFFIC MARKERS

Sambatek
www.sambatek.com
12800 Whitewater Drive, Suite 300
Minnetonka, MN 55343
763.476.6010 telephone
763.476.8532 facsimile
Engineering | Surveying | Planning | Environmental

Client
ROBERT STREET INVESTORS, LLLP

Project
ROBERT STREET RILEY ADDITION

Location
WEST ST. PAUL, MN

Certification

I hereby certify that this survey, plan or report was prepared by me or under my direct supervision and that I am a duly Licensed LAND SURVEYOR under the laws of the State of Minnesota.

PRELIMINARY

Rick M. Blom
Registration No. 21729 Date: 04/19/2016

If applicable, contact us for a wet signed copy of this survey which is available upon request at Sambatek's, Minnetonka, MN office.

Summary

Designed: MGB Drawn: DL
Approved: RMB Book / Page: 1264/16
Phase: PRELIMINARY Initial Issue: 04/DD/2016

Revision History

No.	Date	By	Submittal / Revision

Sheet Title
PRELIMINARY PLAT

Sheet No. **Revision**
1/1

Project No. CON20491

Luminaire Schedule							
Symbol	Qty	Label	Arrangement	LLF	Description	Arr. Watts	Lum. Lumens
	4	AA	SINGLE	0.900	MCGRAW GLEON-AE-06-LED-E1-5WQ MOUNT ON 20FT POLE WITH 30IN BASE	315	32327
	2	BB	SINGLE	0.900	MCGRAW GLEON-AE-04-LED-E1-T3 MOUNT ON 20FT POLE WITH 30IN BASE	213	20704
	1	CC	SINGLE	0.900	MCGRAW GLEON-AE-01-LED-E1-SL4-HSS MOUNT ON 20FT POLE WITH 30IN BASE	56	4361
	3	DD	SINGLE	0.900	MCGRAW GLEON-AE-04-LED-E1-SL4-HSS MOUNT ON 20FT POLE WITH 30IN BASE	213	16800
	1	FF	SINGLE	0.900	MCGRAW GLEON-AE-01-LED-E1-T3 WALL MOUNT AT 12FT	56	5374
	11	GG	SINGLE	0.900	LUMARK XTOR2A WALL MOUNT AT 8FT	18	1635

Calculation Summary							
Label	CalcType	Units	Avg	Max	Min	Avg/Min	Max/Min
PROPERTY LINE LIVINGSTON - EXC	Illuminance	Fc	0.00	0.0	0.0	N.A.	N.A.
PROPERTY LINE ROBERT ST-EXC	Illuminance	Fc	0.12	2.1	0.0	N.A.	N.A.
SITE GROUND	Illuminance	Fc	1.16	10.3	0.0	N.A.	N.A.
PARKING NORTH	Illuminance	Fc	1.85	4.0	0.7	2.64	5.71
PARKING SOUTH	Illuminance	Fc	2.28	10.3	0.6	3.80	17.17

Luminaire Location Summary						
LumNo	Label	X	Y	Z	Orient	Tilt
24	AA	560956.2	254421.0	22.5	0	0
25	AA	560964.8	254299.1	22.5	0	0
29	BB	560824.3	254217.8	22.5	270	0
33	AA	561038.8	254193.8	22.5	0	0
34	DD	560959.8	254021.0	22.5	90	0
35	DD	561055.3	254020.3	22.5	90	0
36	AA	560915.0	254175.1	22.5	0	0
37	BB	560909.5	254096.5	22.5	180	0
43	DD	561112.7	254088.6	22.5	180	0
46	FF	561093.3	254446.2	12	90	0
48	CC	561032.6	254477.2	22.5	270	0
49	GG	561037.3	254363.2	8	180	0
50	GG	561037.3	254335.1	8	180	0
51	GG	561046.3	254245.5	8	180	0
52	GG	561046.2	254269.9	8	180	0
53	GG	561037.3	254393.8	8	180	0
54	GG	561067.1	254426.3	8	90	0
55	GG	561069.1	254106.3	8	0	0
56	GG	561027.1	254135.8	8	180	0
57	GG	560986	254126.9	8	90	0
58	GG	561127	254301.9	8	0	0
59	GG	561099.6	254230.7	8	270	0

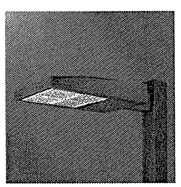

TYPE AA, BB, CC, DD, & FF - MCGRAW GLEON SERIES

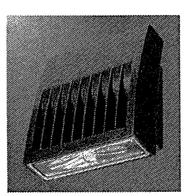

TYPE GG - LUMARK CROSSTOUR SERIES

GENERAL NOTES:

A. PULSE PRODUCTS DOES NOT ASSUME RESPONSIBILITY FOR THE INTERPRETATION OF THIS CALCULATION OR COMPLAINCE TO THE LOCAL, STATE, OR FEDERAL LIGHTNG CODES OR ORDINANCES.

B. LIGHTING LAYOUT IS NOT INTENDED FOR CONSTRUCTION DOCUMENTS BUT ONLY TO ILLUSTRATE THE PERFORMANCE OF THE PRODUCT.

C. ALL READINGS/CALCULATIONS SHOWN ARE SHOWN ON OBJECTS/SURFACES.

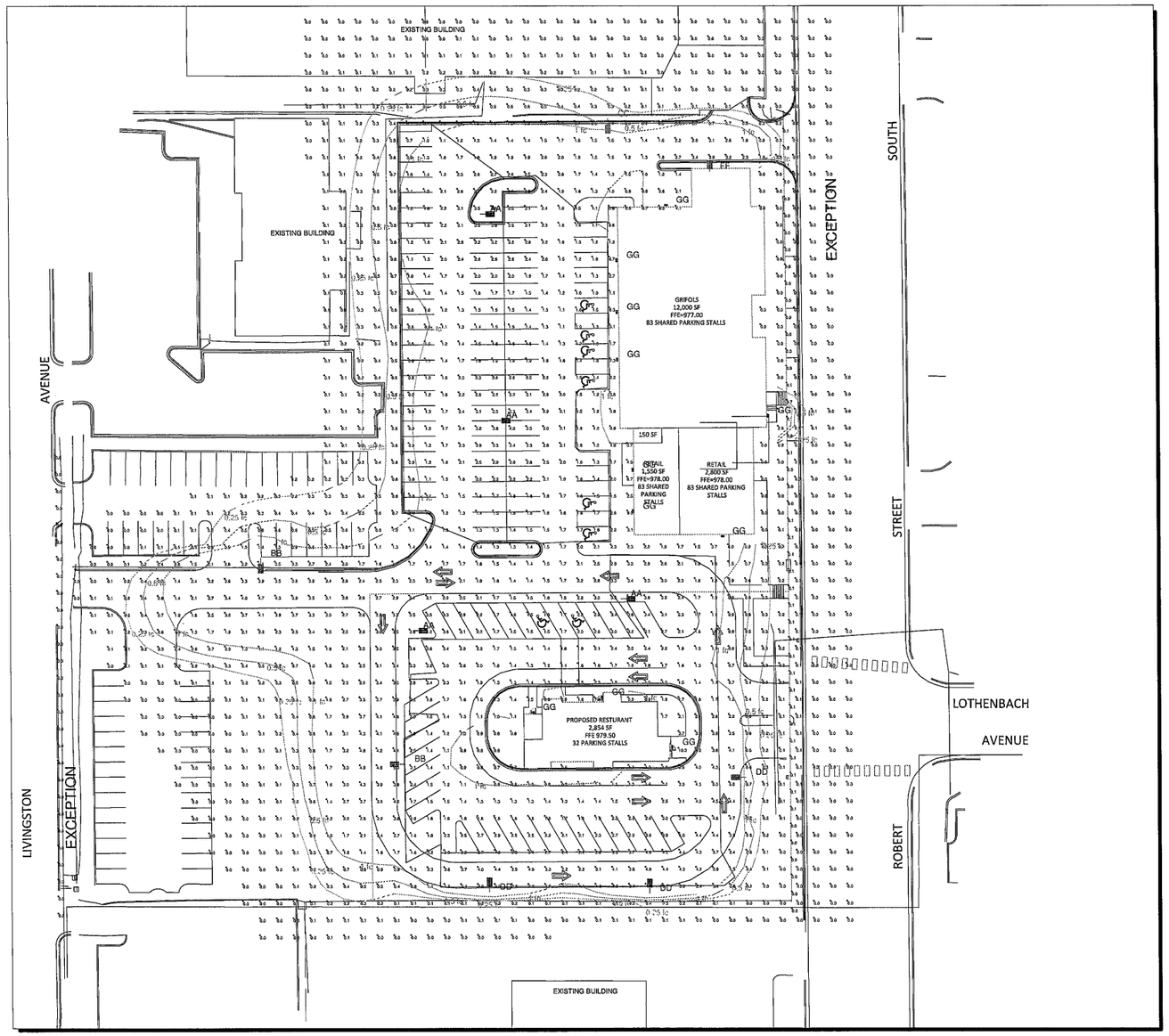

Plan View
Scale: 1 inch= 40 Ft.

PULSE never ordinary

#	Date	Comments

Revisions

Drawn By: SANDY
Checked By: TRENT
Date:5/5/2016
Scale: AS NOTED

WEST ST. PAUL RETAIL

TO:	Mayor and City Council
THROUGH:	Matt Fulton, City Manager
	Jim Hartshorn, Comm. Dev. Dir.
FROM:	Ben Boike, Assistant Comm. Dev. Dir.
DATE:	May 23, 2016
SUBJECT:	Conditional Use Permit – 1365 Bidwell St.

City of West St. Paul

BACKGROUND INFORMATION:

The applicant is proposing to expand the existing pump station building in order to add an emergency generator. Section 153.051 of the Zoning Ordinance requires a Conditional Use Permit (CUP) for all "Essential Service Structures" in the R1 District. As the attached narrative states, over the past several years, power outages at the station have become more frequent and have the potential to interrupt water service to the community. The proposed generator would allow for water service to continue during future outages. Please see the attached narrative for more information regarding the need for the generator as well as the attached Planning Commission memo for more information regarding the request.

In addition to the CUP request, the applicant also requested a setback variance to allow the building expansion.

<u>Committee of Adjustments/Planning Commission</u>
The Planning Commission met in regular session on May 17, 2016 and held a public hearing. The Commission voted 7-0 to recommend CONTINUATION of the application to the June 20, 206 meeting.

Family members of the adjacent property owner to the west of the subject property spoke about their concerns with the addition towards their property line, specifically with potential noise from the proposed generator, the look of the building, drainage and overall impact to their property. They also mentioned that the property has had issues in the past with exterior maintenance. As a result, the Committee of Adjustments continued the Variance request to their June 21, 2016 meeting and the Planning Commission continued the Conditional Use Permit to their June 21, 2016 meeting, both requesting that the applicant provide more information regarding the look of the proposed addition, noise levels, etc. or explore other alternatives on-site for locating the generator.

Staff sent the applicant a 60-day extension letter extending the review period for the application until August 19, 2016 to render a decision on the applications (original 60-day timeline expires June 20th).

FISCAL IMPACT:

		Amount
Fund:		
Department:		
Account:		**N/A**

STAFF RECOMMENDATION:

Staff recommends that the City Council continue the public hearing to the June 27, 2016 Council meeting to allow for additional review by the Committee of Adjustments/Planning Commission at their June 20, 2016 meeting.

TO: Planning Commission

FROM: Ben Boike, Assistant Comm. Dev. Dir.

DATE: May 17, 2016

SUBJECT: Case #16-05

City of West St. Paul

REQUEST

St. Paul Regional Water Services is requesting a Conditional Use Permit to allow for an expansion of an Essential Service Structure (water pump house) at 1365 Bidwell St.

Attachments:
Application Package
Notice
Plans

EXISTING LAND USES

The subject property consists of a pump station for St. Paul Regional Water. Adjacent properties to the north, south and west consist of single family homes. The adjacent property to the east consists of an apartment building.

ZONING

The subject property and adjacent properties to the north, south and west are zoned R1, Single Family Residential. Adjacent properties to the east are zoned R4, Multiple Family Residential.

ANALYSIS

Zoning Ordinance

Section 153.051 of the Zoning Ordinance requires a Conditional Use Permit to allow Essential Service Structures in an R1 District:

153.051 CONDITIONAL USES.

Within any R-1A One-Family Residential District, no structure or land shall be used for the following uses, except by conditional use permit:

(B) Essential service structures, including, but not limited to, buildings, such as telephone exchange stations, booster or pressure regulating stations, wells and pumping stations, elevated tanks, lift stations and electrical power substation provided no building shall be located within 50 feet from any lot line of an abutting lot in an R District. Prior to granting the permit it shall be found that the architectural design of essential service structures is compatible to the neighborhood in which it is to be located and thus will promote the general welfare;

Proposal

The applicant is proposing to expand the building in order to add an emergency generator. As the attached narrative states, over the past several years, power outages at the station have become more frequent and have the potential to interrupt water service to the community. The proposed generator would allow for water service to continue during future outages. Please see the attached narrative for more information regarding the need for the generator.

Review

Per the attached submitted plans, the applicant is proposing an 11' 5" addition to the rear (west side) of the existing building. The resulting side yard setback is 5' 5" to the west property line. The applicant is also requesting a variance to allow for a reduction in the required setback to the neighboring residential property. Staff is recommending a condition of approval requiring that the Conditional Use Permit is contingent upon approval of the corresponding variance request.

As mentioned with the variance request, the proposed setback is consistent with the side yard minimum setback for homes in the R1 District. Since the proposed addition will mimic an addition to a home, Staff is comfortable with the proposed setback. The proposed generator will only run during power outages and monthly testing in the afternoon. In addition, the applicant is including sound proofing for the generator. As a result, noise levels should be minimal outside of the building.

Staff is recommending conditions of approval requiring that testing of the generator be conducted during daylight hours and that should noise from the generator become a public nuisance, the applicant shall work with Staff to mitigate the issue.

In order to provide a buffer between the neighboring house to the west and the proposed addition, Staff is recommending a condition of approval requiring that the existing four foot tall chain link fence be replaced with a six foot tall maintenance free fence along the west property line starting at the southwest corner of the proposed addition heading west to the west property line and then extending north along the west property line to the northwestern corner of the property.

STAFF RECOMMENDATION

Staff recommends APPROVAL of the CONDITIONAL USE PERMIT for an expansion of an ESSENTIAL SERVICE STRUCTURE in an R1 District at 1365 Bidwell St. subject to the following conditions:

1. The Conditional Use Permit application is contingent upon approval of the corresponding Variance request.
2. The applicant shall apply for applicable building permits.
3. Testing of the proposed generator shall be conducted during daylight hours.
4. Should noise levels resulting from the proposed generator create a public nuisance as determined by the Zoning Administrator, the applicant shall work with Staff to mitigate the noise issues.
5. The applicant shall replace the existing 4-foot chain link fence with a 6-foot maintenance free fence from the southwest corner of the proposed addition west to the west property line and then extending north along the west property line to the northwest corner of the property.

SAINT PAUL REGIONAL WATER SERVICES
WEST ST. PAUL PUMP STATION GENERATOR AND ELECTRICAL IMPROVEMENTS

WEST ST. PAUL, MN

ELECTRICAL DRAWINGS

SYMBOL	WIRING SYSTEMS
#10	INDICATES WIRE SIZE. IF NOT NOTED #12 AWG CONDUCTORS SHALL BE USED
	HOME RUN
L101	PANEL NUMBER
3,5	CIRCUIT NUMBER
	NOTE: ANY CIRCUITS WITHOUT FURTHER DESIGNATION IS A TWO WIRE CIRCUIT. A GREATER NUMBER OF WIRES ARE INDICATED BY CROSS MARKS
LP-1/3	PANELBOARD/CIRCUIT NUMBER
A	FIXTURE TYPE
a	SWITCH DESIGNATION
H1712	PANEL NAME
	CIRCUIT NUMBER
	GROUNDING CONDUCTOR
	HOT CONDUCTOR
	NEUTRAL CONDUCTOR
	CONDUIT CAPPED OR BUSHED
	CONDUIT CONTINUATION
	BRANCH CIRCUIT (UNDER FLOOR OR UNDER GROUND)
	GROUND

SYMBOL	EQUIPMENT SYSTEMS
	TERMINAL CABINETS
	ANNUNCIATORS
FACP	FIRE ALARM CONTROL PANEL
FAAP	FIRE ALARM ANNUNCIATOR
	BRANCH CIRCUIT PANELS (250V OR LESS)
	BRANCH CIRCUIT PANELS (277/480V)
	DISTRIBUTION PANEL OR SWITCHBOARD
	SWITCHBOARD MAIN
	DRY TYPE TRANSFORMER - SIZE AS NOTED ON DRAWING
	DISCONNECT SWITCH
	MAGNETIC MOTOR STARTER
	DISCONNECT SWITCH & MAGNETIC MOTOR STARTER IN SAME LOCATION
MMS	MANUAL MOTOR STARTING SWITCH (W/OVERLOADS)
M	MOTOR RATED SWITCH
	MANUAL MOTOR CONTROL SWITCH
T	CONTROL TRANSFORMER
R	RELAY
C	CONTACTOR
T	THERMOSTAT
	AUXILIARY EQUIPMENT (AS NOTED)
J J	JUNCTION BOX
MH	MANHOLE
HH	HAND HOLE
	GOUNDING SYSTEM BUS BAR

SYMBOL	MISC. DEVICES
	CABLE TRAY - SIZE AS NOTED
	WIREMOLD
	PLUG STRIP - OUTLET SPACING AS SHOWN OR SPECIFIED
2	INDICATES NOTE ON PLAN
EXH 1	EQUIPMENT OR APPLIANCE (NO. REFERS TO SCHEDULE)
4	FEEDER NUMBER
	MECHANICAL EQUIPMENT CROSS REFERENCE (NO. REFERS TO SCHEDULE).

GENERAL NOTES

1. BRANCH CIRCUIT DESIGNATIONS AS INDICATED ON THESE DRAWINGS ARE FOR CLARIFICATION ONLY AND DO NOT REPRESENT EXACT CIRCUIT DESIGNATIONS IN THE PANELS SERVING THE AREAS. EXACT LOCATIONS AND/OR DESIGNATIONS SHALL BE ADJUSTED AS REQUIRED TO PROVIDE BALANCED LOADING OF ALL THE PHASES IN THE PANEL.
2. WHERE AN ELECTRICAL OR COMMUNICATION SYSTEM IS CALLED OUT TO BE INTERCONNECTED WITH AN EXISTING SYSTEM THE CONTRACTOR SHALL BE RESPONSIBLE FOR THE COORDINATION OF THE POINT OF THE INTERCONNECTION AS WELL AS THE MEANS OF INTERCONNECTION WITH THE EXISTING SYSTEM.
3. INSTALLATION OF ALL FIXTURES SHALL COMPLY WITH ALL INTERNATIONAL BUILDING CODE REQUIREMENTS.
4. INTERRUPTING RATINGS NOTED IN SCHEDULES SHALL APPLY TO THE ENTIRE PANELBOARD AND/OR SWITCHBOARD. ALL EQUIPMENT SHALL BE FULLY RATED FOR SHORT CIRCUIT CURRENT NOTED.
5. LABEL ALL TERMINAL CABINETS TO INDICATE THEIR FUNCTION.
6. ALL ELECTRICAL BOXES THAT ARE ABANDONED DURING THE COURSE OF THE PROJECT SHALL HAVE A BLANK COVERPLATE.
7. ADJUST MOUNTING HEIGHTS OF ELECTRICAL DEVICES IF REQUIRED SO AS NOT TO INTERFERE WITH RADIATION.
8. WHEREVER THE INSTALLATION OF ELECTRICAL EQUIPMENT CONFLICTS WITH EXISTING CONDITIONS NOT SHOWN ON THE PLANS OR SPECIFICATIONS, THE CONTRACTOR SHALL DETERMINE A SATISFACTORY ALTERNATIVE MEANS FOR INSTALLATION AND VERIFY IT WITH THE ENGINEER PRIOR TO INSTALLATION.
9. DEVICE LOCATIONS SHOWN ON THESE PLANS AND NOTED EXISTING HAVE BEEN DERIVED FROM EXISTING PLANS AND MAY NOT BE INSTALLED AS SHOWN. THE CONTRACTOR SHALL VERIFY ALL LOCATIONS AND ROUTING PATHS.
10. WHERE ELECTRICAL DEVICES ARE LOCATED ADJACENT TO LIGHT SWITCHES, MOUNT ALL DEVICES AT THE SAME ELEVATION. OR LINE OF PLUMB.
11. PROVIDE ALL ELECTRICAL DEMOLITION WORK AS REQUIRED TO FACILITATE THE NEW WORK. DEMOLITION DRAWINGS INDICATE DESIGN INTENT AND MAY NOT BE INCLUSIVE OF ALL MISCELLANEOUS AND INCIDENTAL ITEMS. NO ALLOWANCE WILL BE MADE FOR THE CONTRACTORS FAILURE TO FAMILIARIZE THEMSELF WITH THE EXISTING BUILDING CONDITIONS AND THE AMOUNT OF EFFORT TO COMPLETE THE NEW ELECTRICAL WORK AS SHOWN ON THE DRAWINGS.
12. PROVIDE ALL ELECTRICAL DEMOLITION WORK IN AREAS WHERE NOTED. PROVIDE DISCONNECTION AND REMOVAL OF ALL ELECTRICAL EQUIPMENT, LIGHT FIXTURES, DEVICES, PANELBOARDS, CONDUIT AND CABLE IN THESE AREAS. TURN OVER EQUIPMENT TO OWNER THAT WHICH THEY DESIRE TO RETAIN. ALL OTHER EQUIPMENT SHALL BE DISPOSED OF BY THE ELECTRICAL CONTRACTOR. ELECTRICAL CONTRACTOR SHALL BE RESPONSIBLE FOR PROPER DISPOSAL OF LAMPS AND BALLASTS AND MUST COMPLY WITH ALL STATE AND FEDERAL REGULATIONS GOVERNING THEIR DISPOSAL. INFORMATION ABOUT PROPER LAMP AND BALLAST DISPOSAL IS AVAILABLE FROM THE "MINNESOTA POLLUTION CONTROL AGENCY" AT 1-800-657-3724.
13. DO NOT SCALE DRAWINGS. VERIFY DIMENSIONS IN FIELD PRIOR TO COMMENCEMENT OF WORK.
14. FINAL CONNECTIONS TO EQUIPMENT SHALL BE PER MANUFACTURERS APPROVED WIRING DIAGRAMS, DETAILS AND INSTRUCTIONS. IT SHALL BE THE CONTRACTORS RESPONSIBILITY TO PROVIDE MATERIALS AND EQUIPMENT COMPATIBLE WITH EQUIPMENT ACTUALLY SUPPLIED.

INDEX TO ELECTRICAL SHEETS

E1.0 ELECTRICAL TITLE SHEET
E1.1 SITE PLAN
E1.2 EXISTING PARTIAL LAYOUT PLAN
E1.3 NEW PARTIAL LAYOUT PLAN
E2.1 PARTIAL ONE LINE DIAGRAM - NOT ISSUED
E2.2 NEW ONE LINE DIAGRAM - NOT ISSUED
E3.1 ELECTRICAL SCHEDULE AND DETAILS - NOT ISSUED

LINETYPE LEGEND

	NEW FIXTURE
	EXISTING FIXTURE TO BE REMOVED
	EXISTING FIXTURE TO REMAIN OR BE REUSED
	NEW DEVICE
	EXISTING DEVICE TO BE REMOVED
	EXISTING DEVICE TO REMAIN OR BE REUSED
	NEW DEVICE
	EXISTING DEVICE TO BE REMOVED
	EXISTING DEVICE TO REMAIN OR BE REUSED

Project Number: 16-005
Date: 04/21/2016
Drawing No. E1.0

CUP SUBMITTAL
NOT FOR CONSTRUCTION
APRIL 21, 2016

Project: Saint Paul Regional Water Services
Title: Electrical Title Sheet
West St. Paul Pump Station Generator and Electrical Improvements
1365 Bidwell Street, West St. Paul, MN 55118

edi
engineering design initiative
1112 north 5th street.
minneapolis, mn 55411
(612) 343-5965 ph
(612)343-5982 fax
www.ediltmited.com

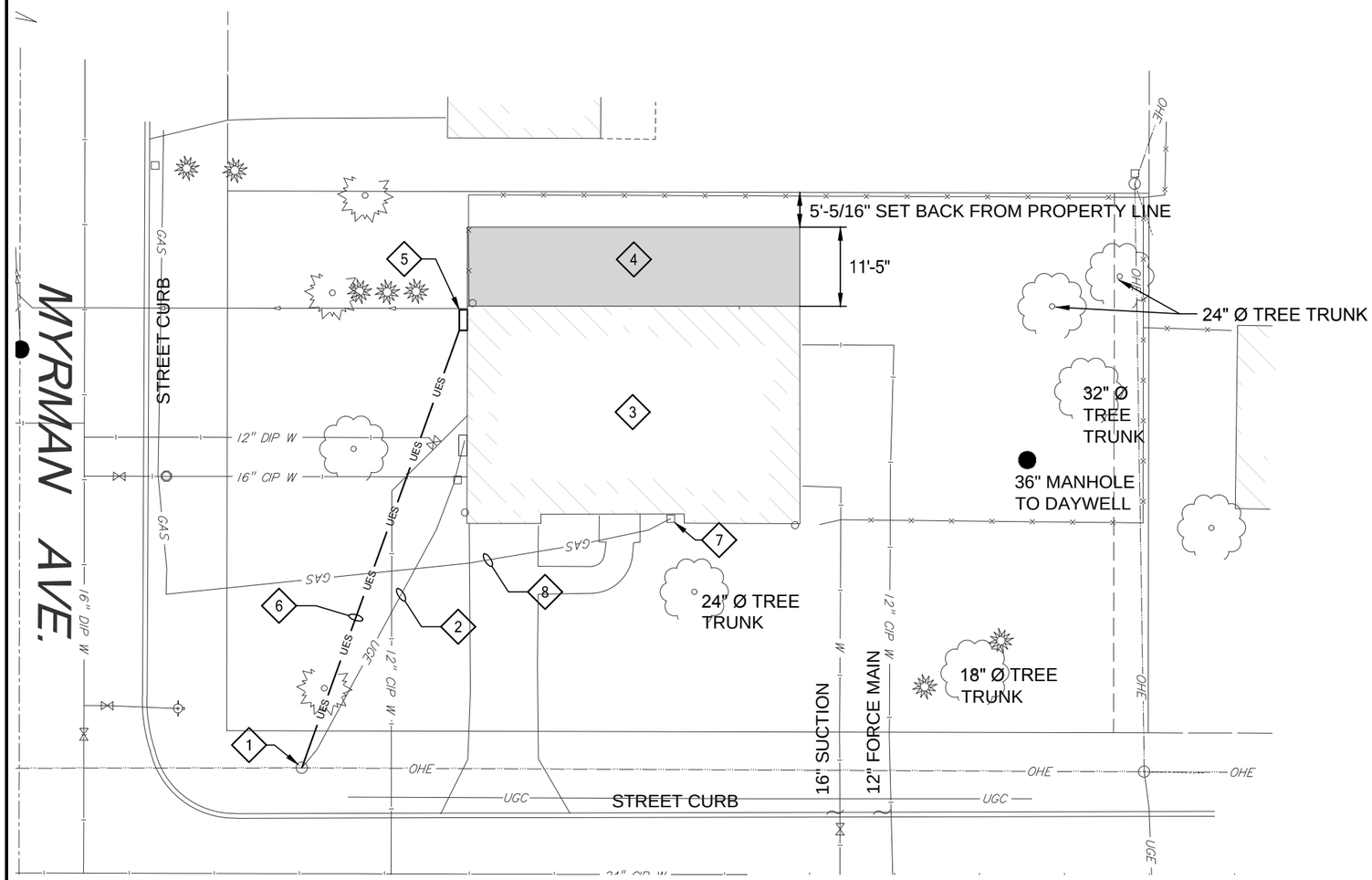

1 West St. Paul Pump Station - Site Plan

SCALE: 1" = 20'-0"

NORTH

0 20'

PLAN NOTES:

1. EXISTING UTILITY POLE MOUNTED TRANSFORMERS FOR 240 VOLT DELTA HIGH LEG ELECTRICAL SERVICE.
2. EXISTING UNDERGROUND ELECTRICAL SERVICE TO FACILITY. DISCONNECT AND REMOVE AFTER NEW SERVICE INSTALLED. COORDINATE WITH UTILITY.
3. EXISTING BUILDING.
4. NEW BUILDING ADDITION.
5. NEW WALL MOUNTED METER CABINET.
6. NEW UNDERGROUND ELECTRICAL SERVICE TO BE FURNISHED AND INSTALLED UP THE UTILITY POLE BY THE CONTRACTOR FROM THE NEW METER CABINET. ARRANGE WITH THE UTILITY FOR THE INSTALLATION OF A NEW 480/277 VOLT 3 PHASE 4 WIRE SERVICE TO THE FACILITY. UTILIZE TWO (2) 3-1/2" CONDUITS EACH WITH FOUR (4) 350 KEMIL CONDUCTORS PLUS ONE (1) 2/0 AWG GROUND.
7. EXISTING GAS METER.
8. APPROXIMATE ROUTE OF EXISTING GAS SERVICE LINE. CONTRACTOR SHALL ARRANGE WITH XCEL ENERGY TO UPGRADE SERVICE TO REQUIREMENTS NEEDED TO FEED THE NEW GENERATOR ALONG WITH OTHER BUILDING LOADS. SEE MECHANICAL FOR MORE DETAILS.

Project Number: 16-005
Date: 04/21/2016
Drawing No. E1.1

CUP SUBMITTAL
NOT FOR CONSTRUCTION
APRIL 21, 2016

Project: Saint Paul Regional Water Services
Title: Site Plan West St. Paul Pump Station Generator and Electrical Improvements
1365 Bidwell Street, West St. Paul, MN 55118

edi
engineering design initiative
1112 north 5th street.
minneapolis, mn 55411
(612) 343-5965 ph
(612)343-5982 fax
www.edilimited.com

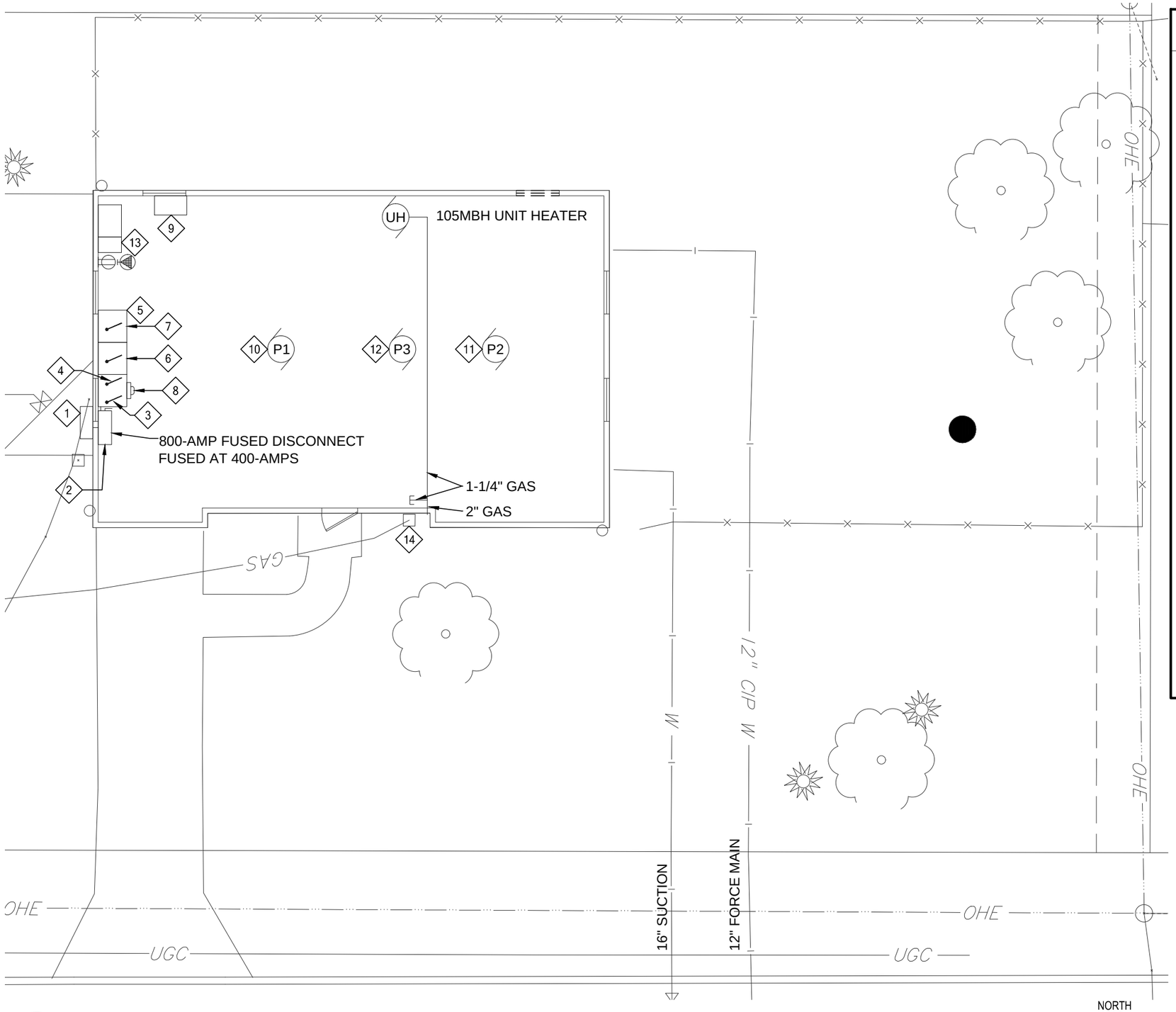

1 West St. Paul Pump Station - Existing Partial Layout Plan

SCALE: 1" = 10'-0"

PLAN NOTES:

1. EXISTING GENERATOR CONNECTION BOX.
2. EXISTING 800-AMP FUSED DISCONNECT SWITCH FOR GENERATOR CONNECTION.
3. EXISTING AUXILLARY POWER MANUAL SWITCH LOCATED IN FIRST SECTION OF SWITCHGEAR.
4. EXISTING 800-AMP, 240-VOLT, 3-PHASE MAIN UTILITY DISCONNECT SWITCH LOCATED IN FIRST SECTION OF SWITCHGEAR.
5. EXISTING WESTINGHOUSE THREE SECTION 800-AMP, 120/240-VOLT, 3-PHASE ELECTRICAL GEAR.
6. SECOND SECTION OF GEAR WITH CONTROLLER FOR PUMP #1.
7. THIRD SECTION OF GEAR WITH CONTROLLER FOR PUMP #2 AND PUMP #3.
8. EXISTING UTILITY METER
9. EXISTING RTU-30.
10. EXISTING 30 HP, 230-VOLT, 74-AMP, 1770 RPM, 3-PHASE, MOTOR FOR PUMP P1.
11. EXISTING 50 HP, 230-VOLT, 125-AMP, 1780 RPM, 3-PHASE, MOTOR FOR PUMP P2.
12. EXISTING 50 HP, 230-VOLT, 119-AMP, 3-PHASE, MOTOR FOR PUMP P3.
13. EXISTING PANEL BOARD.
14. EXISTING GAS METER.

Project Number: 16-005
Date: 04/21/2016
Drawing No. E1.2

CUP SUBMITTAL
NOT FOR CONSTRUCTION
APRIL 21, 2016

Project: Saint Paul Regional Water Services
Title: Existing Partial Layout Plan West St. Paul Pump Station Generator and Electrical Improvements
1365 Bidwell Street, West St. Paul, MN 55118

edi
engineering design initiative
1112 north 5th street,
minneapolis, mn 55411
(612) 343-5965 ph
(612)343-5982 fax
www.edilimited.com

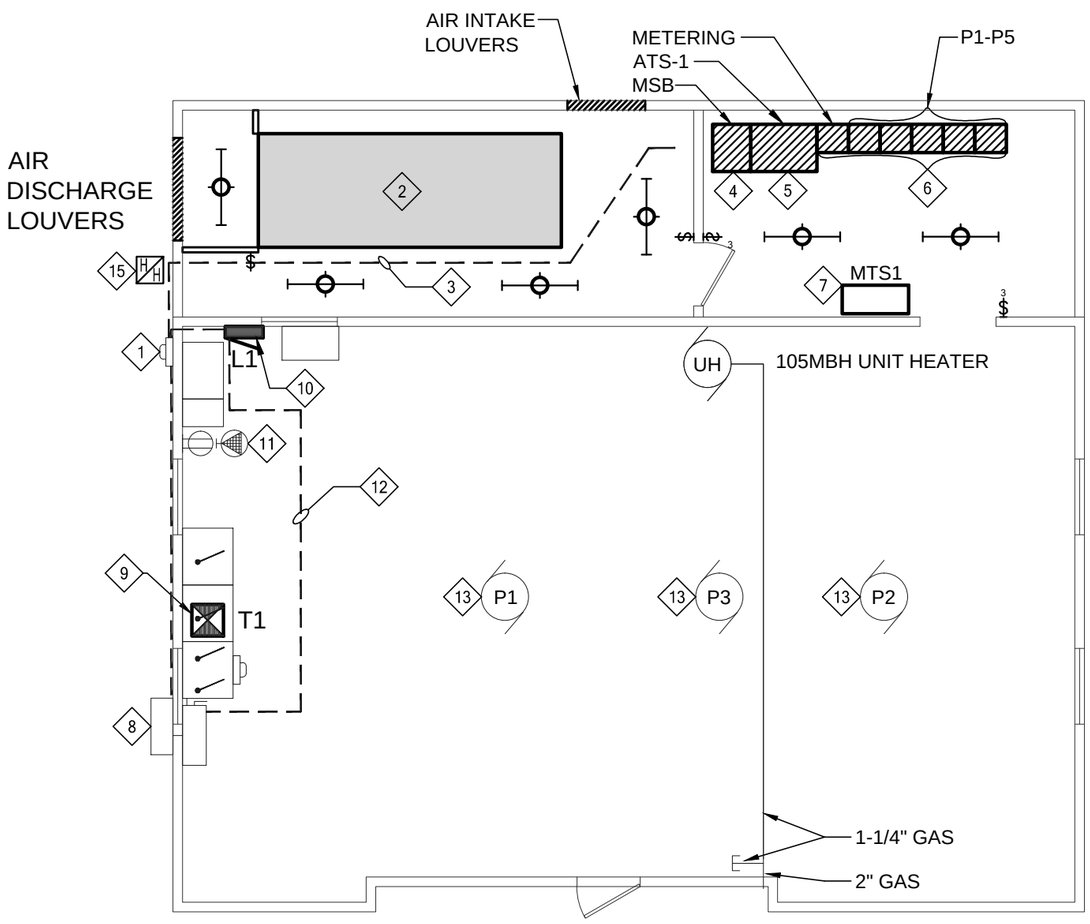

1 West St. Paul Pump Station - New Plan

SCALE: 1/8" = 1'-0"

NORTH

0 8'

PLAN NOTES:

1. FURNISH AND INSTALL NEW 600 AMP, 600V, 3 PHASE 4 WIRE WALL MOUNTED METER CABINET. COORDINATE WITH ELECTRICAL UTILITY FOR REQUIREMENTS.
2. FURNISH AND INSTALL NEW GENERATOR ON CONTRACTOR FURNISHED PAD. SEE DETAILS AND SPECIFICATIONS FOR FURTHER INFORMATION.
3. FURNISH AND INSTALL TWO (2) 3-1/2" CONDUITS UNDERGROUND FOR SERVICE FEED TO MSB FROM METERING CABINET. SEE SHEET E2.2 FOR WIRING DETAILS.
4. FURNISH AND INSTALL NEW MAIN SWITCH BOARD MSB WITH 600 AMP MAIN BREAKER. SEE SHEET E2.2 AND SPECIFICATIONS FOR MORE DETAILS. MAXIMUM HEIGHT OF UNIT TO BE 72"
5. FURNISH AND INSTALL AUTOMATIC TRANSFER SWITCH ATSI. SEE SHEET E2.2 AND SPECIFICATIONS FOR MORE DETAILS. MAXIMUM HEIGHT OF UNIT TO BE 72".
6. FURNISH AND INSTALL NEW MCC. SEE SHEET E2.2 AND SPECIFICATIONS FOR DETAILS. MAXIMUM HEIGHT OF UNIT SHALL BE 72".
7. FURNISH AND INSTALL NEW MANUAL TRANSFER UNIT MTSI. SEE SHEET E2.2 FOR MORE DETAILS.
8. FURNISH AND INSTALL NEW GENERATOR DOCKING STATION TO REPLACE EXISTING. SEE SHEET E2.2 FOR MORE DETAILS.
9. FURNISH AND INSTALL NEW WALL MOUNTED TRANSFORMER T1. SEE SHEET E2.2 AND SPECIFICATIONS FOR MORE DETAILS.
10. FURNISH AND INSTALL NEW 200 AMP PANEL BOARD. SEE SHEET E2.2 AND SPECIFICATIONS FOR MORE DETAILS.
11. RELOCATE EXISTING CONVENIENCE AND WELDING RECEPTACLE TO ADJACENT WALL. WIRE TO NEW PANEL L1.
12. DISCONNECT AND REMOVE EXISTING 240 VOLT SERVICE AND DISTRIBUTION SWITCH GEAR AFTER NEW SERVICE AND DISTRIBUTION INSTALLED AND TESTED. COORDINATE WITH OWNER, UTILITY, AND ENGINEER TO KEEP DOWNTIME TO A MINIMUM OF SIX (6) HOURS.
13. REWIRE EXISTING PUMPS FOR OPERATION AT 480 VOLTS SEE SHEET E2.2 FOR FURTHER DETAILS.
14. NOT USED.
15. FURNISH AND INSTALL ONE (1) HANDHOLE FOR ROUTING OF CABLES FROM METERING CABINET TO MSB. UTILIZE QUAZITE #PG2436BA36 OR APPROVED EQUAL.

Project Number: 16-005
Date: 04/21/2016
Drawing No. E1.3

CUP SUBMITTAL
NOT FOR CONSTRUCTION
APRIL 21, 2016

Project: Saint Paul Regional Water Services
Title: New Partial Layout Plan West St. Paul Pump Station Generator and Electrical Improvements
1365 Bidwell Street, West St. Paul, MN 55118

engineering design initiative
1112 north 5th street, minneapolis, mn 55411
(612) 343-5965 ph (612)343-5982 fax
www.edlimited.com

TO: Mayor and City Council

THROUGH: Matt Fulton, City Manager

Jim Hartshorn, Community Development Dir.

FROM: Ben Boike, Assistant Comm. Dev. Dir.

City of West St. Paul

DATE: May 23, 2016

SUBJECT: Garbage & Rubbish/Temporary Storage Container Ordinance

---

BACKGROUND INFORMATION:

Staff is recommending the attached ordinance amendment regarding residential storage of trash containers and temporary storage containers. Per the Summary Publication language in the attached ordinance, the proposed ordinance accomplishes the following:

1) Clarifies that trash containers can be set out no sooner than the day before collection day and must be removed no later than the day after collection day. When not awaiting collection, trash containers must be stored in the rear yard, garage or in an accessory building. However, they can be stored in a side yard if the house is setback at least 50 feet from the curb or if screened by a hedge or other enclosure.

2) Limits the location, length of time, and number of temporary outdoor storage containers allowed on a lot at one time on residential property and establish a permitting process. Temporary outdoor storage containers shall be limited to no more than two portable on-demand storage units and one roll-off dumpster for no more than 30 days on a site in a 12 month period with extensions allowed if used in conjunction with a valid building permit.

There was discussion at the first reading relating to the enforcement of how long trash containers can be left at the end of driveways. Generally speaking, most residents put their trash out the day of service and take them back in at the end of the day. However, Staff does receive complaints about residents leaving them out for extended periods of time. The proposed language will allow simply allow staff to enforce the timeline (out day of and back in by the day after) when complaints are received.

FISCAL IMPACT:

N/A

		Amount
Fund:		
Department:		
Account:		

STAFF RECOMMENDATION:

Staff recommends that the City Council approve the final reading of the attached ordinance amendment.

Ord. No. 2016-____

CITY OF WEST ST. PAUL
DAKOTA COUNTY, MINNESOTA

AN ORDINANCE AMENDING
WEST ST. PAUL CITY CODE CHAPTER 92, SECTION 92.02
REGARDING GARBAGE AND RUBBISH AND TEMPORARY OUTDOOR STORAGE CONTAINERS

The City Council of West St. Paul does ordain:

SECTION 1. AMENDMENT. West St. Paul City Code Chapter 92, Section 92.02 relating to Garbage and Rubbish is hereby amended as follows:

92.02 GARBAGE AND RUBBISH.

(A) *Dumping or leaving rubbish.* It is unlawful for any person to deposit, unload, dump, discharge, throw out, place or maintain any rubbish, garbage, refuse, noxious matter or waste upon any public street, sidewalk or property.

(B) *Exceptions.*

(1) When awaiting collection, all garbage and rubbish ~~may be~~ must be properly placed in a container (including all loose contents), stored in the front yard, driveway, or public boulevard (behind the curb, not in the street) as follows:

(a) ~~Up to four hours in closed plastic or waterproof bags; or~~ Containers may be set out no sooner than one day prior to collection day;

(b) ~~Up to 18 hours in rigid covered, plastic or metal containers~~. Containers (and any material not picked up by the garbage hauler) must be removed from the front yard, driveway or public boulevard by the end of collection day.

(2) ~~Other than as provided above,~~When not awaiting collection, garbage and rubbish must be properly stored in containers that are kept in rear yards, in accessory buildings or in garages ~~or screened from view from any public street~~. Containers may only be stored in a side yard if the setback of the home is at least 50 feet from the curb and they are stored behind the front building line of the home; if the setback of the home is not 50 feet from the curb, then the containers may only be stored in a side yard if they are screened by a hedge or enclosure so that they are not in immediate view of the public street.

(C) *Dumping on property.* It is unlawful for any person to dump or permit the dumping of garbage, refuse, rubbish, discarded articles and other debris upon any property without a permit pursuant to §§ 32.15 through 32.20.

(D) *Temporary Outdoor Storage Containers.* "Temporary outdoor storage containers" includes, but are not limited to, portable on-demand storage units and roll-off dumpsters. All temporary outdoor storage containers placed in a residential zoning district or on residential property shall be regulated by this section.

(1) *Permit.* No temporary outdoor storage containers may be placed in a residential zoning district or on residential property without a permit pursuant to City Code Section 32. No more than two portable on-demand storage units and one roll-off dumpster will be permitted on a lot at one time. Staff reserves the right to restrict the number of temporary storage containers per lot to protect the general health, safety and welfare of the public. Either the residential property owner upon whose property the container will be placed or the company placing the temporary storage container may apply for a permit. The permit holder will be responsible for complying with the terms of this ordinance.

(2) *Location.* Temporary outdoor storage containers shall be placed in private driveways whenever possible. However, all temporary outdoor storage containers must comply with the following requirements:

(a) They shall not obstruct any public sidewalk;

(b) They shall not be located within 30 feet of an intersection;

(c) They shall be located at least 6 feet from any residential building;

(d) They shall be located at least 10 feet from any property line, unless located in a driveway or on a street;

(e) With the exception of new construction sites, they must be placed on a concrete or asphalt type surface. Wood planking or plywood shall be placed under the wheels or "feet" of the container;

(f) If located in a street or alley, flashers or reflective tape are required on or around the container.

(3) *Length of time.* Temporary outdoor storage containers shall not be located on an individual lot, parcel or site for more than 30 days during any 12 month period. Additional 30 day extensions may be granted by the City if the container is used in conjunction with a valid building permit for up to a total of 90 days annually for single-family residential and up to a total of 180 days annually for multi-family residential.

(4) Any damage to public property, such as the street, curb or sidewalk as a result of the placement of the temporary storage container is the responsibility of the permit holder. Damage to public property is deemed to be a Public Nuisance and will result in Emergency Abatement procedures being followed pursuant to City Code Section 94.15(E) and the costs being assessed against the property pursuant to City Code Section 94.20(B).

(5) *Other*. Temporary outdoor storage containers shall be constructed in such a manner that its contents will be adequately contained and the container shall be maintained in good repair.

SECTION 2. SUMMARY PUBLICATION. Pursuant to Minnesota Statutes Section 412.191, in the case of a lengthy ordinance, a summary may be published. While a copy of the entire ordinance is available without cost at the office of the City Clerk, the following summary is approved by the City Council and shall be published in lieu of publishing the entire ordinance:

> The ordinance amendment clarifies that trash containers can be set out no sooner than the day before collection day and must be removed no later than the day after collection day. When not awaiting collection, trash containers must be stored in the rear yard or in an accessory building. However, they can be stored in a side yard if the house is setback at least 50 feet from the curb or if screened by a hedge or other enclosure. In addition the ordinance amendment adds language to limit the location, length of time, and number of temporary outdoor storage containers allowed on a lot at one time on residential property and establish a permitting process. Temporary outdoor storage containers shall be limited to no more than one portable on-demand storage unit and one roll-off dumpster for no more than 30 days on a site in a 12 month period with extensions allowed if used in conjunction with a valid building permit.

SECTION 3. EFFECTIVE DATE. This ordinance shall be in full force and effect from and after its passage and publication according to law.

Passed this _____ day of _____, 2016.

Ayes: Nays:

Attest:

_____ _____

David Meisinger, Mayor Chantal Doriott, City Clerk

TO: Mayor and City Council
FROM: Matt Fulton, City Manager
DATE: April 25, 2016
SUBJECT: Public Hearing and Final Reading of a mendments to City Code Chapter 50, Section 50.08 regarding discharge of prohibited clear water drainage; Sump Pumps.

BACKGROUND INFORMATION : The first reading regarding the proposed ordinance amendments was held on April 25, 2016. The City Council has had numerous opportunities to discuss the Inflow/Infiltration (I/I) program in detail and is very interested in ensuring that this issue is resolved in a manner consistent with Met Council expectations and also minimally invasive and cost sensitive for West St Paul residents and businesses.

If approved, the City Code amendments and changes to the I/I program would take effect on July 1, 2016.

DISCUSSION : Met Council staff has recognized the challenges that WSP is currently experiencing in attempting to correct all I/I issues over a relative short timeframe of several years. The Met Council Environmental Services division has worked with City staff to develop a Memorandum of Understanding (MOU) that provides the City the opportunity to remove I/I from the community's (public and private) sanitary service lines over a longer period without the potential of additional surcharges being assessed against the City for excess I/I. The MOU will be considered by the Metropolitan Council, with the staff's strong recommendation, at its meeting on May 24, 2016

A summary of the proposed changes to this program are as follows:

- Effective July 1, 2016, change the I/I program to be something that is required to be dealt with at the time of selling a owner-occupied residential property. An I/I compliance inspection would need to occur prior to the sale of the property. This inspection would be conducted at no expense, provided an access point is made available and service line roots do not impede the ability to inspect the sanitary sewer service line. Any areas of non-compliance would need to be corrected within 12 months of the sale of the property. The owner/buyer would need to negotiate who's responsibility it is to correct any non-compliance areas.
- During the City's annual street repair program, inspections would be conducted on properties adjacent to the construction work so that any problems at the sanitary sewer main can be identified and planned for. Impacted property owners will be encouraged, but not required, to address I/I issues during the street improvement project and to work collaboratively as a neighborhood, to take advantage of the road being opened which possibly could save property owners money.
- Effective July 1, 2016, bringing rental properties into compliance would become a requirement for receiving a rental license to operate in the City. Rental properties would be required to bring the licensed facility into compliance within 24 months of receiving their next annual rental license. I/I compliance would need to be verified every 12 years. Rental properties would be responsible for identifying and correcting all internal I/I issues. The City would only inspect the service line(s) connecting to the sanitary main.
- Effective July 1, 2016, Commercial properties and Homeowner Associations would be required to become compliant within 24 months of the ordinance being approved. I/I compliance would need to be verified every 12 years after receiving first notice of compliance. The City would only inspect the service line(s) connecting to the sanitary main.

- Street excavation for correcting I/I non-compliance issues would be prohibited, except under unique circumstances as approved by the City Engineer. Any required I/I repairs within the right of way area would need to be done from outside of the right of way and not come any closer than two feet from the Sanitary Sewer main.
- The City would address any needed sanitary service line connection repairs at the time of undertaking sanitary sewermain improvements. Any repairs to the service line connection during such a project would be the financial responsibility of the City.
- Monthly surcharges for not correcting I/I non-compliance areas within the allowed timeframes would be implemented and enforced.
- Staff would recommend the I/I program be brought in house and managed through the City's Public Works Department. The City Council has already approved the hiring of an I/I liaison, who would now also be the person undertaking the inspections as well. This approach will save the City significant resources and help ensure accountability, customer friendliness, and quality of the program, including helping residents and businesses get through the process. Inspections would be scheduled through the City.
- The City would continue its current process of reimbursing 15% of all I/I repair costs for an individual property up to $5,000 as well as provide the opportunity to have remaining I/I repair costs special assessed to the property and paid for over a ten year period at a very low interest rate. Given the "point of sale" nature of the program, the number of special assessments used for correcting I/I should be fewer as property equity is used to cover repair costs. Deferred assessments for income qualifying seniors would also continue to be provided.
- Staff would also propose a significant community educational campaign to help property owners understand the changes to the program and importance of correcting I/I issues.

As part of the Met Council MOU, annual workplans and progress reports will be expected. As part of this, staff will ensure that performance measurement indicators will be included so that progress is objectively measured.

FISCAL IMPACT

As a result of bringing the inspections in-house, it is expected that City savings will exceed $100,000/year.

STAFF REQUEST FOR CONSIDERATION

Staff is requesting the Council to take the following actions:

1. Hold the public hearing regarding the proposed ordinance amendments
2. Consider approval of the proposed Ordinance amendments to City Code Chapter 50, Section 50.08 regarding Discharge of Prohibited Clean Water Drainage; Sump Pumps
3. Consider approving the proposed MOU with the Metropolitan Council regarding I/I schedule and responsibilities.

2016 Memorandum of Understanding
Relating to Ongoing Inflow and Infiltration Program
Between
City of West St. Paul
And
Metropolitan Council

DRAFT

WHEREAS:

1. The Council has adopted the Inflow and Infiltration (I/I) program procedures pursuant to Minnesota Statutes (M.S.), chapter 473, including section 473.145-146 and section 473.858, and the MCES's Waste Discharge Rules, and are declared to be necessary for the efficient, economic, and safe operation of the regional sanitary sewer system and for protection of the health, safety, and general welfare of the public in the metropolitan region.
2. The Metropolitan Council Environmental Services (MCES) policy regarding I/I is contained in the *2040 Water Resources Policy Plan*, adopted by the Metropolitan Council in May 2015.
3. The Ongoing I/I Mitigation Program requires that the Council establish inflow and infiltration goals for all communities discharging wastewater to the regional wastewater system. Communities that have excessive inflow and infiltration in their sanitary sewer systems will be required to eliminate the excessive inflow and filtration within a reasonable time period.
4. The City of West St. Paul has been identified by the Council as having excessive inflow and infiltration in the wastewater collection system.
5. Because of circumstances related to age of infrastructure, age of housing stock, historical building methods used to handle clear water, and capacity in the local wastewater collection systems, West St. Paul will be undertaking a long term I/I mitigation program.

Now, therefore, the Metropolitan Council ("Council") and the City of West St. Paul ("City") hereby agree as follows:

1. **Purpose of Agreement**: The parties to the Memorandum of Understanding ("MOU") recognize the need to outline their joint and separate efforts in the area of inflow and infiltration mitigation.

2. **Continuation of private property I/I mitigation**: The City will adopt and implement ordinances which require the following effective July 1, 2016:
   a. An I/I compliance inspection shall occur prior to the sale of a property. The property shall be brought into compliance within 12 months from the date of the sale of the property.
   b. Properties affected by the city's annual pavement management program shall be offered a free lateral inspection. The city shall encourage private property owners to have non-compliant services replaced.
   c. Rental properties shall be required to become compliant within 24 months of the property's annual rental license renewal.
   d. Commercial properties and homeowner associations shall be required to become compliant within 24 months of the ordinance becoming effective.

The City will properly enforce the ordinance. An estimated 250-500 properties will be inspected and the lateral connection repaired or replaced on an annual basis.

3. **I/I Policy Implementation**: The City will report to the MCES a list of compliant properties including addresses and cost of service lateral repair including city contribution. The report shall be submitted by March 31 each year. The City will also submit a report documenting expenditures to the City's wastewater collection system. The Council will advise West St. Paul of wastewater flows including exceedances, but the city will not be subjected to an I/I surcharge or workplan assignment.

4. **Joint Study:** The Council and the City will work jointly to measure wastewater flows and groundwater elevations in order to assess program effectiveness.

5. **Comprehensive Plan Amendment:** The City will submit a comprehensive sewer plan update to the Council by December 31, 2018. The amendment will identify additional improvements to reduce the potential for excessive I/I.

6. **Effective Date:** This MOU shall be effective upon execution by both of the parties.

7. **Termination Upon Mutual Agreement**. The parties may terminate this agreement upon mutual written consent.

DRAFT

METROPOLITAN COUNCIL	FOR THE CITY OF WEST ST. PAUL
By:	**Mayor:**
Title: Regional Administrator	**City Manager:**
Date:	**Date:**
APPROVED AS TO FORM	**APPROVED AS TO FORM**
By:	**By:**

DRAFT

ORDINANCE NO._____
CITY OF WEST ST. PAUL
DAKOTA COUNTY, MINNESOTA

AN ORDINANCE AMENDING CHAPTER 50, SECTION 50.08 OF THE WEST ST. PAUL CITY CODE REGARDING DISCHARGE OF PROHIBITED CLEAR WATER DRAINAGE; SUMP PUMPS

The City Council of West St. Paul does ordain:

SECTION 1. West St. Paul City Code Chapter 50, Section 50.08 relating to the Discharge of Prohibited Clear Water Drainage; Sump Pumps, is hereby amended as follows:

§ 50.08 DISCHARGE OF PROHIBITED CLEAR WATER DRAINAGE; SUMP PUMPS.

(A) ~~(A)~~ *Definition.* ***CLEAR WATER DRAINAGE***, for the purpose of this section, is defined as stormwater, natural precipitation, ground water or flow from roof runoff, surface runoff, subsurface drainage, down spouts, eave troughs, rainspouts, yard drains, sump pumps, foundation drains, yard fountains, ponds, cistern overflows or water discharged from any nonresidential air conditioning unit or system.

(B) *Ownership.* The property owner shall own and be responsible for the maintenance of the sanitary sewer service lateral between the city's sanitary sewer main within the street and the building being served, including the connection to the main.

(C) ~~(B)~~ *Prohibited discharges.* No person shall directly or indirectly discharge~~,~~ or permit to be discharged any clear water drainage into the city's sanitary sewer system.

(D) ~~(C)~~ *Prohibited connections.* No person shall make or maintain a connection between any conductor used to carry clear water drainage and the city's sanitary sewer system.

(E) ~~(D)~~ *Sump pumps.* Dwellings and other buildings and structures that require a sump pump system to discharge excess water because of the infiltration of water into basements, crawl spaces and the like shall obtain a permit and have a permanently installed discharge line that complies with the following:

(1) It shall not any time discharge water into the city's sanitary sewer system;

(2) It shall provide for year-round discharge capability to either the outside of the dwelling, building or structure, to the city's storm sewer system;

(3) It shall consist of a rigid discharge line inside the dwelling or building, without any connections for altering the path of discharge, and if connected to the city's storm sewer line must include a check valve; and

(4) Must be directed toward the front or rear yard so as not to trespass or discharge on to adjoining properties.

(F) ~~(E)~~ *Inspections.* The City shall conduct inspections of single-family owner-occupied properties to ensure compliance with this section. Failure to have an inspection as required in this section is a violation of the city code. ~~Inspection shall be conducted pursuant to § 10.17.~~

(1) Except as set forth in § 50.08 (F)(3), inspections are required when the following occurs:

a. The property is offered for sale or conveyance by deed or contract for deed;

b. The city orders a street reconstruction project and the property is adjacent to a street in the project area;

(2) Inspections shall be conducted pursuant to §10.17. In addition to the inspection requirements in §10.17, owners shall be required to comply with the following:

a. Provide sufficient access to the sanitary sewer service lateral within the dwelling, building or other structure, including removal of any obstacles so that the sanitary sewer service lateral is completely accessible to the inspector;

b. Clear the sanitary sewer service lateral of any root intrusions or any other intrusions to allow clear televising of the sanitary sewer service lateral from the dwelling, building or other structure to its connection with the city's sanitary sewer main.

(3) Inspections shall not be required under the following circumstances:

a. It is a newly constructed dwelling and title to the property is transferred to the first owner;

b. It is the sale or other transfer of title of any property with a dwelling that is being conveyed to a public body;

c. It is the sale or transfer of title of any property that contains a dwelling that will be demolished;

d. It is the sale or conveyance of any property that contains a dwelling by a sheriff or other public or court officer in the performance of their official duties. This exception does not apply to the sale by a person appointed by a probate court.

(4) The city shall complete its inspection reports within 10 business days from the date of the inspection and immediately send the report to the property owner. The

reports shall indicate all deficiencies discovered in sufficient detail to identify the obstructions and the specific section(s) of the sanitary sewer service lateral that must be repaired.

(G) *Certificates of Inflow and Infiltration ("I/I") Compliance*. If a property is in compliance with this section, the city shall issue a Certificate of I/I Compliance. No new inspections or certificates for single-family owner occupied properties shall be required until one of the events in section 50.08(F)(1) occurs. Certificates of Compliance for residential rental properties and commercial, industrial and HOA properties are valid for a period of 12 years.

(H) *Residential rental properties.* For residential rental properties, the property owner is required to obtain an independent inspection and submit an inspection report to the city upon submission of a new or renewal rental license application. The inspection report shall indicate that the property is free from prohibited discharges and prohibited connections, including illegal sump pumps. If there are any violations discovered, the property owner shall have 24 months from the date of this ordinance to correct any deficiencies and provide a corrected inspection report. The city shall conduct a reinspection to verify compliance. Upon verification, the city shall issue a Certificate of I/I Compliance.

(I) *Commercial, Industrial and HOA Properties.* For commercial and industrial properties and residential properties with a homeowners' association, property owners are required to obtain an independent inspection and submit an inspection report to the city. The inspection report shall indicate that the property is free from prohibited discharges and prohibited connections, including illegal sump pumps. If there are any violations discovered, the property owner shall have 24 months from the date of this ordinance to correct any deficiencies and provide a corrected inspection report. The city shall conduct a reinspection to verify compliance. Upon verification, the city shall issue a Certificate of I/I Compliance.

(J) ~~(F)~~ *Violations.*

(1) Violations discovered at time of sale.

a. Seller Responsibilities. When the inspector determines that there has been a violation of any provision of this section~~, the inspector will give notice of the violation to the owner and occupant in writing and allow up to 180 days to correct the violation, unless more time is granted by the City Council.~~ prior to the sale, the seller is responsible for correcting the violations, unless the buyer has assumed such responsibility as provided in subsection b. below. Failure of a seller to disclose to a buyer that there are uncorrected violations of this section is a violation of the city code. When correcting the violations, all necessary permits shall be obtained from the city. Upon completion of the corrections, the city shall reinspect the property to verify compliance.

b. Buyer Responsibilities. If a seller cannot correct the violations prior to the sale the buyer must assume the responsibility for correcting the violations. The buyer shall sign a written acknowledgement from the city that includes:

1. The buyer's acceptance and assumption of responsibility for correcting the violations within one year after closing on the property;

2. That the buyer understands that a reinspection is required to verify the corrections have been completed;

3. That the buyer holds the city harmless from liabilities and claims if the buyer occupies the dwelling prior to corrections of the violations.

4. That failure to correct violations or deficiencies is a violation of the city code and subjects the buyer to penalties as stated in §50.08 (K), (M), and (N)

(2) Violations and corrections under the roadway. When the inspector determines that there has been a violation of any provision of this section and the violations are under the roadway, the city will perform the repairs, except as stated in subsection (3) below. A property owner shall not excavate in the roadway without permission from the City Engineer.

(3) Non-excavation violations and corrections within two feet from the main. When the property owner is correcting violations of the sanitary sewer service lateral between the street and the building and the corrections only involve lining of the sanitary sewer service lateral, the owner shall stop all repairs at a distance of two feet from the city's sanitary sewer main. The city shall perform any repairs within two feet from the main.

(K) ~~(G)~~ *Surcharge.*

(1) A monthly surcharge of $50 for single-family properties and a surcharge of $300 for all other properties shall be added to each sewer and water bill if:

(a) An owner fails to complete an inspection pursuant to §50.08(F), (H) and (I);

(b) An owner whose property was found in violation of this section did not make the necessary changes and furnish proof of those changes to the city within ~~180 days or such other time frame as stated in the notice of violation~~the time frames required by this section;

~~(a)~~(c) An owner fails to allow an inspection or reinspection to verify compliance; or

~~(b)~~(d) There has been a reconnection of a previously disconnected prohibited discharge. If a property is certified in compliance with this section and the same owner is later found to have reconnected to the ~~municipal~~ city's sanitary sewer system, the property owner will be subject to the surcharge for all months between the last two inspections. ~~If there has been a change in ownership, then the new owner shall be given a notice of violation and allowed up to 180 days to comply.~~

(2) The surcharge shall be added for every month during which the property is not in compliance.

(L) ~~(H)~~ *Temporary waiver.* The ~~Public Works Director~~City Engineer may allow or require a temporary waiver from the provisions of this section when strict enforcement would cause a threat of damage to other property, the environment or public safety because of circumstances unique to the individual property. A written request for a temporary waiver must be first submitted to the ~~Public Works Director~~City Engineer specifying the reasons for the request. If a waiver is required or granted, the property owner must pay an additional fee for sanitary sewer services based on the number of gallons discharged into the sanitary sewer system, as estimated by the ~~Public Works Director~~City Engineer. The ~~Public Works Director~~City Engineer may terminate the waiver upon a failure to comply with any conditions imposed in the temporary waiver or may take appropriate legal action to enforce those conditions. After expiration or termination of a temporary waiver, the property owner must comply with the provisions of this section.

(M) ~~(I)~~ *Public nuisance.* An owner or occupant who fails to have an inspection, who has done work that does not comply with this section, who reconnects to a previously disconnected prohibited discharge, who fails to pay the surcharge or who has failed to do the work required by this section within the specified time limit ~~given by the inspector~~, will be deemed to have created a public nuisance subject to abatement and assessment, as provided in Chapter 94.

(N) ~~(J)~~ *Remedies.* The remedies provided in this section do not limit the right of the city to pursue any other available legal remedy

SECTION 4. SUMMARY PUBLICATION. Pursuant to Minnesota Statutes Section 412.191, in the case of a lengthy ordinance, a summary may be published. While a copy of the entire ordinance is available without cost at the office of the City Clerk, the following summary is approved by the City Council and shall be published in lieu of publishing the entire ordinance:

> The ordinance amendment provides new triggering events when homeowners have to comply with inflow and infiltration deficiencies. For single family owner-occupied homes, the inspections will be conducted by city inspectors at the time of sale or at the time of a street reconstruction project. If the property is being sold, any deficiencies may be repaired by the seller or buyer. If the buyer elects to complete the repairs, the buyer has one year after the sale to do it. If there is a street reconstruction project and the issues are between the curb and the city main, the city will perform the repairs. Rental properties will be required to have an inspection at the time the owners apply for or are

renewing a rental license, but must do so within 24 months after the ordinance is adopted. Commercial, industrial properties and those properties with a homeowners' association will be required to obtain independent inspections and complete any repairs within 24 months after the ordinance is adopted. After the city has verified compliance, a Certificate of I/I Compliance will be issued.

SECTION 5. EFFECTIVE DATE. This Ordinance shall be in full force and effect ~~from and after its passage and publication according to law~~on July 1, 2016.

Passed this _____ day of _____, 2016.

Ayes: Nays:

Attest:

_____ _____

David Meisinger, Mayor Chantal Doriott, City Clerk

TO: Mayor and City Council

THROUGH: Matt Fulton, City Manager

FROM: Joan Carlson, Finance Director

DATE: May 23, 2016

SUBJECT: Award Sale of $5,110,000 GO Utility Revenue Bonds, 2016A

City of West St. Paul

BACKGROUND INFORMATION:

On April 11, 2016, the Council authorized the solicitation of bids for the sale of $5,110,000 General Obligation Utility Revenue Bonds, Series 2016A. These bonds will be issued to finance utility improvements including the rebuild of lift stations 5 and 6 and storm and sanitary sewer improvements included with the Robert Street project and the 2016/2017 street project.

Ehlers & Associates will receive bids in their office on Monday, May 23, 2015. They will then perform the necessary financial analysis of the proposals to determine which to recommend to the Council. Their analysis will be available Monday night, and will include the repayment schedule. Because of the timing of the review process, the data will not be available until Monday evening for your action.

FISCAL IMPACT:

Bond Issue Costs:

		Amount
Fund:	**New Bond Fund: 336**	
Department:	**Debt Service: 47000**	
Account:	**Issue Costs: 40625**	**$55,000**

STAFF RECOMMENDATION:

Approve sale of $5,110,000 GO Utility Revenue Bonds, 2016A.

EXTRACT OF MINUTES OF A MEETING OF THE
CITY COUNCIL OF THE
CITY OF WEST ST. PAUL, MINNESOTA

HELD: MAY 23, 2016

Pursuant to due call, a regular meeting of the City Council of the City of West St. Paul, Dakota County, Minnesota, was duly held at the City Hall on May 23, 2016, at 6:30 P.M., for the purpose, in part, of considering proposals and awarding the sale of $5,110,000 General Obligation Utility Revenue Bonds, Series 2016A.

The following members were present:

and the following were absent:

Member _____ introduced the following resolution and moved its adoption:

RESOLUTION NO. _____

RESOLUTION PROVIDING FOR THE ISSUANCE AND SALE OF $5,110,000 GENERAL OBLIGATION UTILITY REVENUE BONDS, SERIES 2016A AND PLEDGING FOR THE SECURITY THEREOF NET REVENUES

A. WHEREAS, the City of West St. Paul, Minnesota (the "City"), owns and operates a municipal sanitary sewer system (the "Sanitary Sewer System") and a municipal storm sewer system (the Storm Sewer System", and together with the Sanitary Sewer System, the "System"), each is operated as separate revenue producing public utilities; and

B. WHEREAS, the net revenues of the Sanitary Sewer System are pledged to the payment of the City's outstanding (i) "Prior 2000 Bonds Refunding Portion" of $4,000,000 original principal amount General Obligation Refunding Bonds, Series 2009A, dated March 18, 2009; and (ii) $1,545,000 General Obligation Sewer Revenue Bonds, Series 2009C, dated November 18, 2009 (together, the "Outstanding Sanitary Sewer Bonds"); and

C. WHEREAS, the net revenues of the System are pledged to the payment of the City's outstanding "System Portion" of $1,535,000 original principal amount of General Obligation Bonds, Series 2013A, dated July 3, 2013; (the "Outstanding System Bonds"); and

D. WHEREAS, the City Council has heretofore determined and declared that it is necessary and expedient to issue $5,110,000 General Obligation Utility Revenue Bonds, Series 2016A (the "Bonds" or individually, a "Bond"), pursuant to Minnesota Statutes, Section 444.075 and Chapter 475 to finance improvements to the sanitary sewer and storm sewer utilities (the "Project"); and

E. WHEREAS, the City has retained Ehlers & Associates, Inc., in Roseville, Minnesota ("Ehlers"), as its independent financial advisor for the sale of the Bonds and was

therefore authorized to sell the Bonds by private negotiation in accordance with Minnesota Statutes, Section 475.60, Subdivision 2(9) and proposals to purchase the Bonds have been solicited by Ehlers; and

F. WHEREAS, the proposals set forth on Exhibit A attached hereto were received by the City Manager, or designee, at the offices of Ehlers at 10:00 A.M. this same day pursuant to the Preliminary Official Statement for the Bonds, dated May 12, 2016; and

G. WHEREAS, it is in the best interests of the City that the Bonds be issued in book-entry form as hereinafter provided; and

NOW, THEREFORE, BE IT RESOLVED by the City Council of the City of West St. Paul, Minnesota, as follows:

1. Acceptance of Proposal. The proposal of _____ (the "Purchaser"), to purchase the Bonds, in accordance with the Preliminary Official Statement established for the Bonds, at the rates of interest hereinafter set forth, and to pay therefor the sum of $_____, plus interest accrued to settlement, is hereby found, determined and declared to be the most favorable proposal received, is hereby accepted and the Bonds are hereby awarded to the Purchaser. The Finance Director is directed to retain the deposit of the Purchaser and to forthwith return to the unsuccessful bidders their good faith checks or drafts.

2. Bond Terms.

(a) Original Issue Date; Denominations; Maturities; Term Bond Option. The Bonds shall be dated June 16, 2016, as the date of original issue and shall be issued forthwith on or after such date in fully registered form. The Bonds shall be numbered from R-1 upward in the denomination of $5,000 each or in any integral multiple thereof of a single maturity (the "Authorized Denominations"). The Bonds shall mature on February 1 in the years and amounts as follows:

Year	Amount	Year	Amount
2018		2026	
2019		2027	
2020		2028	
2021		2039	
2022		2030	
2023		2031	
2024		2032	
2025			

As may be requested by the Purchaser, one or more term Bonds may be issued having mandatory sinking fund redemption and final maturity amounts conforming to the foregoing principal repayment schedule, and corresponding additions may be made to the provisions of the applicable Bond(s).

(b) Book Entry Only System. The Depository Trust Company, a limited purpose trust company organized under the laws of the State of New York or any of its successors or its successors to its functions hereunder (the "Depository") will act as securities depository for the Bonds, and to this end:

(i) The Bonds shall be initially issued and, so long as they remain in book entry form only (the "Book Entry Only Period"), shall at all times be in the form of a separate single fully registered Bond for each maturity of the Bonds; and for purposes of complying with this requirement under paragraphs 5 and 10 Authorized Denominations for any Bond shall be deemed to be limited during the Book Entry Only Period to the outstanding principal amount of that Bond.

(ii) Upon initial issuance, ownership of the Bonds shall be registered in a bond register maintained by the Bond Registrar (as hereinafter defined) in the name of CEDE & CO, as the nominee (it or any nominee of the existing or a successor Depository, the "Nominee").

(iii) With respect to the Bonds neither the City nor the Bond Registrar shall have any responsibility or obligation to any broker, dealer, bank, or any other financial institution for which the Depository holds Bonds as securities depository (the "Participant") or the person for which a Participant holds an interest in the Bonds shown on the books and records of the Participant (the "Beneficial Owner"). Without limiting the immediately preceding sentence, neither the City, nor the Bond Registrar, shall have any such responsibility or obligation with respect to (A) the accuracy of the records of the Depository, the Nominee or any Participant with respect to any ownership interest in the Bonds, or (B) the delivery to any Participant, any Owner or any other person, other than the Depository, of any notice with respect to the Bonds, including any notice of redemption, or (C) the payment to any Participant, any Beneficial Owner or any other person, other than the Depository, of any amount with respect to the principal of or premium, if any, or interest on the Bonds, or (D) the consent given or other action taken by the Depository as the Registered Holder of any Bonds (the "Holder"). For purposes of securing the vote or consent of any Holder under this Resolution, the City may, however, rely upon an omnibus proxy under which the Depository assigns its consenting or voting rights to certain Participants to whose accounts the Bonds are credited on the record date identified in a listing attached to the omnibus proxy.

(iv) The City and the Bond Registrar may treat as and deem the Depository to be the absolute owner of the Bonds for the purpose of payment of the principal of and premium, if any, and interest on the Bonds, for the purpose of giving notices of redemption and other matters with respect to the Bonds, for the purpose of obtaining any consent or other action to be taken by Holders for the purpose of registering transfers with respect to such Bonds, and for all purpose whatsoever. The Bond Registrar, as paying agent hereunder, shall pay all principal of and premium, if any, and interest on the Bonds only to the Holder or the Holders of the Bonds as shown on the bond register, and all such payments shall be valid and

effective to fully satisfy and discharge the City's obligations with respect to the principal of and premium, if any, and interest on the Bonds to the extent of the sum or sums so paid.

(v) Upon delivery by the Depository to the Bond Registrar of written notice to the effect that the Depository has determined to substitute a new Nominee in place of the existing Nominee, and subject to the transfer provisions in paragraph 10, references to the Nominee hereunder shall refer to such new Nominee.

(vi) So long as any Bond is registered in the name of a Nominee, all payments with respect to the principal of and premium, if any, and interest on such Bond and all notices with respect to such Bond shall be made and given, respectively, by the Bond Registrar or City, as the case may be, to the Depository as provided in the Letter of Representations to the Depository required by the Depository as a condition to its acting as book-entry Depository for the Bonds (said Letter of Representations, together with any replacement thereof or amendment or substitute thereto, including any standard procedures or policies referenced therein or applicable thereto respecting the procedures and other matters relating to the Depository's role as book-entry Depository for the Bonds, collectively hereinafter referred to as the "Letter of Representations").

(vii) All transfers of beneficial ownership interests in each Bond issued in book-entry form shall be limited in principal amount to Authorized Denominations and shall be effected by procedures by the Depository with the Participants for recording and transferring the ownership of beneficial interests in such Bonds.

(viii) In connection with any notice or other communication to be provided to the Holders pursuant to this Resolution by the City or Bond Registrar with respect to any consent or other action to be taken by Holders, the Depository shall consider the date of receipt of notice requesting such consent or other action as the record date for such consent or other action; provided, that the City or the Bond Registrar may establish a special record date for such consent or other action. The City or the Bond Registrar shall, to the extent possible, give the Depository notice of such special record date not less than 15 calendar days in advance of such special record date to the extent possible.

(ix) Any successor Bond Registrar in its written acceptance of its duties under this Resolution and any paying agency/bond registrar agreement, shall agree to take any actions necessary from time to time to comply with the requirements of the Letter of Representations.

(x) In the case of a partial prepayment of a Bond, the Holder may, in lieu of surrendering the Bonds for a Bond of a lesser denomination as provided in paragraph 5, make a notation of the reduction in principal amount on the panel provided on the Bond stating the amount so redeemed.

(c) Termination of Book-Entry Only System. Discontinuance of a particular Depository's services and termination of the book-entry only system may be effected as follows:

(i) The Depository may determine to discontinue providing its services with respect to the Bonds at any time by giving written notice to the City and discharging its responsibilities with respect thereto under applicable law. The City may terminate the services of the Depository with respect to the Bond if it determines that the Depository is no longer able to carry out its functions as securities depository or the continuation of the system of book-entry transfers through the Depository is not in the best interests of the City or the Beneficial Owners.

(ii) Upon termination of the services of the Depository as provided in the preceding paragraph, and if no substitute securities depository is willing to undertake the functions of the Depository hereunder can be found which, in the opinion of the City, is willing and able to assume such functions upon reasonable or customary terms, or if the City determines that it is in the best interests of the City or the Beneficial Owners of the Bond that the Beneficial Owners be able to obtain certificates for the Bonds, the Bonds shall no longer be registered as being registered in the bond register in the name of the Nominee, but may be registered in whatever name or names the Holder of the Bonds shall designate at that time, in accordance with paragraph 10. To the extent that the Beneficial Owners are designated as the transferee by the Holders, in accordance with paragraph 10, the Bonds will be delivered to the Beneficial Owners.

(iii) Nothing in this subparagraph (d) shall limit or restrict the provisions of paragraph 10.

(d) Letter of Representations. The provisions in the Letter of Representations are incorporated herein by reference and made a part of the resolution, and if and to the extent any such provisions are inconsistent with the other provisions of this resolution, the provisions in the Letter of Representations shall control.

3. Purpose. The Bonds shall provide funds to finance the Project. The total cost of the Project, which shall include all costs enumerated in Minnesota Statutes, Section 475.65, is estimated to be at least equal to the amount of the Bonds. Work on the Project shall proceed with due diligence to completion. The City covenants that it shall do all things and perform all acts required of it to assure that work on the Project proceeds with due diligence to completion and that any and all permits and studies required under law for the Project are obtained.

4. Interest. The Bonds shall bear interest payable semiannually on February 1 and August 1 of each year (each, an "Interest Payment Date"), commencing February 1, 2017, calculated on the basis of a 360-day year of twelve 30-day months, at the respective rates per annum set forth opposite the maturity years as follows:

Maturity Year	Interest Rate	Maturity Year	Interest Rate
2018		2026	

Maturity Year	Interest Rate	Maturity Year	Interest Rate
2019		2027	
2020		2028	
2021		2029	
2022		2030	
2023		2031	
2024		2032	
2025			

5. Optional Redemption. All Bonds maturing February 1, 2025 and thereafter shall be subject to redemption and prepayment at the option of the City on February 1, 2024, and on any date thereafter at a price of par plus accrued interest. Redemption may be in whole or in part of the Bonds subject to prepayment. If redemption is in part, the maturities and the principal amounts within each maturity to be redeemed shall be determined by the City; and if only part of the Bonds having a common maturity date are called for prepayment, the specific Bonds to be prepaid shall be chosen by lot by the Bond Registrar. Bonds or portions thereof called for redemption shall be due and payable on the redemption date, and interest thereon shall cease to accrue from and after the redemption date. Mailed notice of redemption shall be given to the paying agent and to each affected registered holder of the Bonds not more than sixty (60) days and not fewer than thirty (30) days prior to the date fixed for redemption.

To effect a partial redemption of Bonds having a common maturity date, the Bond Registrar prior to giving notice of redemption shall assign to each Bond having a common maturity date a distinctive number for each $5,000 of the principal amount of such Bond. The Bond Registrar shall then select by lot, using such method of selection as it shall deem proper in its discretion, from the numbers so assigned to such Bonds, as many numbers as, at $5,000 for each number, shall equal the principal amount of such Bonds to be redeemed. The Bonds to be redeemed shall be the Bonds to which were assigned numbers so selected; provided, however, that only so much of the principal amount of each such Bond of a denomination of more than $5,000 shall be redeemed as shall equal $5,000 for each number assigned to it and so selected. If a Bond is to be redeemed only in part, it shall be surrendered to the Bond Registrar (with, if the City or Bond Registrar so requires, a written instrument of transfer in form satisfactory to the City and Bond Registrar duly executed by the Holder thereof or the Holder's attorney duly authorized in writing) and the City shall execute (if necessary) and the Bond Registrar shall authenticate and deliver to the Holder of the Bond, without service charge, a new Bond or Bonds having the same stated maturity and interest rate and of any Authorized Denomination or Denominations, as requested by the Holder, in aggregate principal amount equal to and in exchange for the unredeemed portion of the principal of the Bond so surrendered.

6. Bond Registrar. Bond Trust Services Corporation, in Roseville, Minnesota, is appointed to act as bond registrar and transfer agent with respect to the Bonds (the "Bond Registrar"), and shall do so unless and until a successor Bond Registrar is duly appointed, all pursuant to any contract the City and Bond Registrar shall execute which is consistent herewith. The Bond Registrar shall also serve as paying agent unless and until a successor paying agent is duly appointed. Principal and interest on the Bonds shall be paid to the registered holders (or record holders) of the Bonds in the manner set forth in the form of Bond and paragraph 12.

7. Form of Bond. The Bonds, together with the Bond Registrar's Certificate of Authentication, the form of Assignment and the registration information thereon, shall be in substantially the following form:

UNITED STATES OF AMERICA
STATE OF MINNESOTA
DAKOTA COUNTY
CITY OF WEST ST. PAUL

MINNESOTA CREDIT ENHANCEMENT PROGRAM

R-_____ $_____

GENERAL OBLIGATION UTILITY REVENUE BOND, SERIES 2016A

Interest Rate	Maturity Date	Date of Original Issue	CUSIP
	February 1,	June 16, 2016	

REGISTERED OWNER: CEDE & CO.

PRINCIPAL AMOUNT:

THE CITY OF WEST ST. PAUL, DAKOTA COUNTY, MINNESOTA (the "Issuer"), certifies that it is indebted and for value received promises to pay to the registered owner specified above, or registered assigns, unless called for earlier redemption, in the manner hereinafter set forth, the principal amount specified above, on the maturity date specified above, and to pay interest thereon semiannually on February 1 and August 1 of each year (each, an "Interest Payment Date"), commencing February 1, 2017, at the rate per annum specified above (calculated on the basis of a 360-day year of twelve 30-day months) until the principal sum is paid or has been provided for. This Bond will bear interest from the most recent Interest Payment Date to which interest has been paid or, if no interest has been paid, from the date of original issue hereof. The principal of and premium, if any, on this Bond are payable upon presentation and surrender hereof at the Bond Trust Services Corporation, in Roseville, Minnesota (the "Bond Registrar"), acting as paying agent, or any successor paying agent duly appointed by the Issuer (the "Bond Registrar"), acting as paying agent, or any successor paying agent duly appointed by the Issuer. Interest on this Bond will be paid on each Interest Payment Date by check or draft mailed to the person in whose name this Bond is registered (the "Holder" or "Bondholder") on the registration books of the Issuer maintained by the Bond Registrar and at the address appearing thereon at the close of business on the fifteenth day of the calendar month next preceding such Interest Payment Date (the "Regular Record Date"). Any interest not so timely paid shall cease to be payable to the person who is the Holder hereof as of the Regular Record Date, and shall be payable to the person who is the Holder hereof at the close of business on a date (the "Special Record Date") fixed by the Bond Registrar whenever money becomes available for payment of the defaulted interest. Notice of the Special Record Date shall be given to Bondholders not less than ten days prior to the Special Record Date. The principal of and premium, if any, and interest on this Bond are payable in lawful money of the United States of America. So long as this Bond is registered in the name of the Depository or its Nominee as

provided in the Resolution hereinafter described, and as those terms are defined therein, payment of principal of, premium, if any, and interest on this Bond and notice with respect thereto shall be made as provided in the Letter of Representations, as defined in the Resolution, and surrender of this Bond shall not be required for payment of the redemption price upon a partial redemption of this Bond. Until termination of the book-entry only system pursuant to the Resolution, Bonds may only be registered in the name of the Depository or its Nominee.

Optional Redemption. All Bonds of this issue (the "Bonds") maturing February 1, 2025 and thereafter are subject to redemption and prepayment at the option of the Issuer on February 1, 2024, and on any date thereafter at a price of par plus accrued interest. Redemption may be in whole or in part of the Bonds subject to prepayment. If redemption is in part, the maturities and the principal amounts within each maturity to be redeemed shall be determined by the Issuer; and if only part of the Bonds having a common maturity date are called for prepayment, the specific Bonds to be prepaid shall be chosen by lot by the Bond Registrar. Bonds or portions thereof called for redemption shall be due and payable on the redemption date, and interest thereon shall cease to accrue from and after the redemption date. Mailed notice of redemption shall be given to the paying agent and to each affected registered holder of the Bonds not more than sixty (60) days and not fewer than thirty (30) days prior to the date fixed for redemption.

Selection of Bonds for Redemption; Partial Redemption. To effect a partial redemption of Bonds having a common maturity date, the Bond Registrar shall assign to each Bond having a common maturity date a distinctive number for each $5,000 of the principal amount of such Bond. The Bond Registrar shall then select by lot, using such method of selection as it shall deem proper in its discretion, from the numbers assigned to the Bonds, as many numbers as, at $5,000 for each number, shall equal the principal amount of such Bonds to be redeemed. The Bonds to be redeemed shall be the Bonds to which were assigned numbers so selected; provided, however, that only so much of the principal amount of such Bond of a denomination of more than $5,000 shall be redeemed as shall equal $5,000 for each number assigned to it and so selected. If a Bond is to be redeemed only in part, it shall be surrendered to the Bond Registrar (with, if the Issuer or Bond Registrar so requires, a written instrument of transfer in form satisfactory to the Issuer and Bond Registrar duly executed by the Holder thereof or the Holder's attorney duly authorized in writing) and the Issuer shall execute (if necessary) and the Bond Registrar shall authenticate and deliver to the Holder of the Bond, without service charge, a new Bond or Bonds having the same stated maturity and interest rate and of any Authorized Denomination or Denominations, as requested by the Holder, in aggregate principal amount equal to and in exchange for the unredeemed portion of the principal of the Bond so surrendered.

Issuance; Purpose; General Obligation. This Bond is one of an issue in the total principal amount of $5,110,000, all of like date of original issue and tenor, except as to number, maturity, interest rate, denomination and redemption privilege, issued pursuant to and in full conformity with the Charter of the Issuer, the Constitution and laws of the State of Minnesota and a resolution adopted by the City Council on May 23, 2016 (the "Resolution"), for the purpose of providing money to finance improvements to the municipal sanitary sewer system and storm sewer system (together, the "System") within the jurisdiction of the Issuer. This Bond is payable out of the General Obligation Utility Revenue Bonds, Series 2016A Fund of the Issuer. This Bond constitutes a general obligation of the Issuer, and to provide moneys for the prompt and

full payment of its principal, premium, if any, and interest when the same become due, the full faith and credit and taxing powers of the Issuer have been and are hereby irrevocably pledged.

Denominations; Exchange; Resolution. The Bonds are issuable solely in fully registered form in Authorized Denominations (as defined in the Resolution) and are exchangeable for fully registered Bonds of other Authorized Denominations in equal aggregate principal amounts at the principal office of the Bond Registrar, but only in the manner and subject to the limitations provided in the Resolution. Reference is hereby made to the Resolution for a description of the rights and duties of the Bond Registrar. Copies of the Resolution are on file in the principal office of the Bond Registrar.

Transfer. This Bond is transferable by the Holder in person or the Holder's attorney duly authorized in writing at the principal office of the Bond Registrar upon presentation and surrender hereof to the Bond Registrar, all subject to the terms and conditions provided in the Resolution and to reasonable regulations of the Issuer contained in any agreement with the Bond Registrar. Thereupon the Issuer shall execute and the Bond Registrar shall authenticate and deliver, in exchange for this Bond, one or more new fully registered Bonds in the name of the transferee (but not registered in blank or to "bearer" or similar designation), of an Authorized Denomination or Denominations, in aggregate principal amount equal to the principal amount of this Bond, of the same maturity and bearing interest at the same rate.

Fees upon Transfer or Loss. The Bond Registrar may require payment of a sum sufficient to cover any tax or other governmental charge payable in connection with the transfer or exchange of this Bond and any legal or unusual costs regarding transfers and lost Bonds.

Treatment of Registered Owners. The Issuer and Bond Registrar may treat the person in whose name this Bond is registered as the owner hereof for the purpose of receiving payment as herein provided (except as otherwise provided herein with respect to the Record Date) and for all other purposes, whether or not this Bond shall be overdue, and neither the Issuer nor the Bond Registrar shall be affected by notice to the contrary.

Authentication. This Bond shall not be valid or become obligatory for any purpose or be entitled to any security unless the Certificate of Authentication hereon shall have been executed by the Bond Registrar.

Qualified Tax-Exempt Obligations. The Bonds have been designated by the Issuer as "qualified tax-exempt obligations" for purposes of Section 265(b)(3) of the Internal Revenue Code of 1986, as amended.

IT IS HEREBY CERTIFIED AND RECITED that all acts, conditions and things required by the Charter of the Issuer, the Constitution and the laws of the State of Minnesota to be done, to happen and to be performed, precedent to and in the issuance of this Bond, have been done, have happened and have been performed, in regular and due form, time and manner as required by law; that the Issuer has covenanted and agreed with the Holders of the Bonds that it will impose and collect charges for the service, use and availability of the System at the times and in amounts necessary to produce net revenues, together with other sums pledged to the payment of the Bonds, adequate to pay all principal and interest when due on the Bonds; and that

the Issuer will levy a direct, annual, irrepealable ad valorem tax upon all of the taxable property of the Issuer, without limitation as to rate or amount, for the years and in amounts sufficient to pay the principal and interest on the Bonds of this issue as they respectively become due, if the net revenues from the System, and any other sums irrevocably appropriated to the Debt Service Account are insufficient therefor; and that this Bond, together with all other debts of the Issuer outstanding on the date of original issue hereof and the date of its issuance and delivery to the original purchaser, does not exceed any charter, constitutional or statutory limitation of indebtedness.

IN WITNESS WHEREOF, the City of West St. Paul, Dakota County, Minnesota, by its City Council has caused this Bond to be executed on its behalf by the facsimile signatures of its Mayor and its City Manager, the corporate seal of the Issuer having been intentionally omitted as permitted by law.

Date of Registration:

June 16, 2016.

Registrable by: BOND TRUST SERVICES CORPORATION

Payable at: BOND TRUST SERVICES CORPORATION

BOND REGISTRAR'S CERTIFICATE OF AUTHENTICATION

This Bond is one of the Bonds described in the Resolution mentioned within.

BOND TRUST SERVICES CORPORATION
Roseville, Minnesota
Bond Registrar

By:_____
Authorized Signature

CITY OF WEST ST. PAUL,
DAKOTA COUNTY, MINNESOTA

/s/ Facsimile
Mayor

/s/ Facsimile
City Manager

ABBREVIATIONS

The following abbreviations, when used in the inscription on the face of this Bond, shall be construed as though they were written out in full according to applicable laws or regulations:

TEN COM - as tenants in common
TEN ENT - as tenants by the entireties
JT TEN - as joint tenants with right of survivorship and not as tenants in common
UTMA - _____ as custodian for _____
(Cust) (Minor)
under the _____ Uniform
(State)
Transfers to Minors Act

Additional abbreviations may also be used though not in the above list.

ASSIGNMENT

For value received, the undersigned hereby sells, assigns and transfers unto _____ the within Bond and does hereby irrevocably constitute and appoint _____ attorney to transfer the Bond on the books kept for the registration thereof, with full power of substitution in the premises.

Dated:_____ _____

Notice: The assignor's signature to this assignment must correspond with the name as it appears upon the face of the within Bond in every particular, without alteration or any change whatever.

Signature Guaranteed:

_____

Signature(s) must be guaranteed by a national bank or trust company or by a brokerage firm having a membership in one of the major stock exchanges or any other "Eligible Guarantor Institution" as defined in 17 CFR 240.17 Ad-15(a)(2).

The Bond Registrar will not effect transfer of this Bond unless the information concerning the transferee requested below is provided.

Name and Address: _____

_____

_____

(Include information for all joint owners if the Bond is held by joint account.)

PREPAYMENT SCHEDULE

This Bond has been prepaid in part on the date(s) and in the amount(s) as follows:

DATE	AMOUNT	AUTHORIZED SIGNATURE OF HOLDER

8. Execution. The Bonds shall be in typewritten form, shall be executed on behalf of the City by the signatures of its Mayor and City Manager and be sealed with the seal of the City; provided, as permitted by law, both signatures may be photocopied facsimiles and the corporate seal has been omitted. In the event of disability or resignation or other absence of either officer, the Bonds may be signed by the manual or facsimile signature of the officer who may act on behalf of the absent or disabled officer. In case either officer whose signature or facsimile of whose signature shall appear on the Bonds shall cease to be such officer before the delivery of the Bonds, the signature or facsimile shall nevertheless be valid and sufficient for all purposes, the same as if the officer had remained in office until delivery.

9. Authentication. No Bond shall be valid or obligatory for any purpose or be entitled to any security or benefit under this resolution unless a Certificate of Authentication on the Bond, substantially in the form hereinabove set forth, shall have been duly executed by an authorized representative of the Bond Registrar. Certificates of Authentication on different Bonds need not be signed by the same person. The Bond Registrar shall authenticate the signatures of officers of the City on each Bond by execution of the Certificate of Authentication on the Bond and by inserting as the date of registration in the space provided the date on which the Bond is authenticated, except that for purposes of delivering the original Bonds to the Purchaser, the Bond Registrar shall insert as a date of registration the date of original issue, which date is June 16, 2016. The Certificate of Authentication so executed on each Bond shall be conclusive evidence that it has been authenticated and delivered under this resolution.

10. Registration; Transfer; Exchange. The City will cause to be kept at the principal office of the Bond Registrar a bond register in which, subject to such reasonable regulations as the Bond Registrar may prescribe, the Bond Registrar shall provide for the registration of Bonds and the registration of transfers of Bonds entitled to be registered or transferred as herein provided.

Upon surrender for transfer of any Bond at the principal office of the Bond Registrar, the City shall execute (if necessary), and the Bond Registrar shall authenticate, insert the date of registration (as provided in paragraph 9) of, and deliver, in the name of the designated transferee or transferees, one or more new Bonds of any Authorized Denomination or Denominations of a like aggregate principal amount, having the same stated maturity and interest rate, as requested by the transferor; provided, however, that no Bond may be registered in blank or in the name of "bearer" or similar designation.

At the option of the Holder, Bonds may be exchanged for Bonds of any Authorized Denomination or Denominations of a like aggregate principal amount and stated maturity, upon surrender of the Bonds to be exchanged at the principal office of the Bond Registrar. Whenever any Bonds are so surrendered for exchange, the City shall execute (if necessary), and the Bond Registrar shall authenticate, insert the date of registration of, and deliver the Bonds which the Holder making the exchange is entitled to receive.

All Bonds surrendered upon any exchange or transfer provided for in this resolution shall be promptly canceled by the Bond Registrar and thereafter disposed of as directed by the City.

All Bonds delivered in exchange for or upon transfer of Bonds shall be valid general obligations of the City evidencing the same debt, and entitled to the same benefits under this resolution, as the Bonds surrendered for such exchange or transfer.

Every Bond presented or surrendered for transfer or exchange shall be duly endorsed or be accompanied by a written instrument of transfer, in form satisfactory to the Bond Registrar, duly executed by the Holder thereof or his, her or its attorney duly authorized in writing

The Bond Registrar may require payment of a sum sufficient to cover any tax or other governmental charge payable in connection with the transfer or exchange of any Bond and any legal or unusual costs regarding transfers and lost Bonds.

Transfers shall also be subject to reasonable regulations of the City contained in any agreement with the Bond Registrar, including regulations which permit the Bond Registrar to close its transfer books between record dates and payment dates. The City Manager is hereby authorized to negotiate and execute the terms of said agreement.

11. Rights Upon Transfer or Exchange. Each Bond delivered upon transfer of or in exchange for or in lieu of any other Bond shall carry all the rights to interest accrued and unpaid, and to accrue, which were carried by such other Bond.

12. Interest Payment; Record Date. Interest on any Bond shall be paid on each Interest Payment Date by check or draft mailed to the person in whose name the Bond is registered (the "Holder") on the registration books of the City maintained by the Bond Registrar and at the address appearing thereon at the close of business on the fifteenth day of the calendar month next preceding such Interest Payment Date (the "Regular Record Date"). Any such interest not so timely paid shall cease to be payable to the person who is the Holder thereof as of the Regular Record Date, and shall be payable to the person who is the Holder thereof at the close of business on a date (the "Special Record Date") fixed by the Bond Registrar whenever money becomes available for payment of the defaulted interest. Notice of the Special Record Date shall be given by the Bond Registrar to the Holders not less than ten days prior to the Special Record Date.

13. Treatment of Registered Owner. The City and Bond Registrar may treat the person in whose name any Bond is registered as the owner of such Bond for the purpose of receiving payment of principal of and premium, if any, and interest (subject to the payment provisions in paragraph 12) on, such Bond and for all other purposes whatsoever whether or not such Bond shall be overdue, and neither the City nor the Bond Registrar shall be affected by notice to the contrary.

14. Delivery; Application of Proceeds. The Bonds when so prepared and executed shall be delivered by the Finance Director to the Purchaser upon receipt of the purchase price, and the Purchaser shall not be obliged to see to the proper application thereof.

15. Fund and Accounts. For the convenience and proper administration of the moneys to be borrowed and repaid on the Bonds, and to make adequate and specific security to the Purchaser and holders from time to time of the Bonds, there is hereby created a special fund to be designated the "General Obligation Utility Revenue Bonds, Series 2016A Fund" (the

"Fund") to be administered and maintained by the Finance Director as a bookkeeping account separate and apart from all other funds maintained in the official financial records of the City. The Fund shall be maintained in the manner herein specified until all of the Bonds herein authorized and the interest thereon shall have been fully paid. The Operation and Maintenance Account for the Sanitary Sewer System and the Operation and Maintenance Account for the Storm Sewer System (together, the "Operation and Maintenance Accounts") heretofore established by the City shall continue to be maintained in the manner heretofore and herein provided by the City. All moneys remaining after paying or providing for the items set forth in the resolution establishing the Operation and Maintenance Accounts shall constitute and are referred to as "net revenues" until the Bonds and the Outstanding Sewer Bonds have been paid. There shall be maintained in the Fund the following separate accounts to which shall be credited and debited all net revenues of the System as hereinafter set forth. The Finance Director and all officials and employees concerned therewith shall establish and maintain financial records of the receipts and disbursements of the System in accordance with this resolution. In such records there shall be established and maintained accounts of the Fund for the purposes as follows:

(a) Construction Account. To the Construction Account there shall be credited the proceeds of the sale of the Bonds, less any amount paid for the Bonds in excess of the minimum bid. From the Construction Account there shall be paid all costs and expenses of the Project, including the cost of any construction contracts heretofore let and all other costs incurred and to be incurred of the kind authorized in Minnesota Statutes, Section 475.65. Any balance remaining in the Construction Account after completion of the Project shall be transferred to the Debt Service Account.

(b) Debt Service Account. There are hereby irrevocably appropriated and pledged to, and there shall be credited to, the Debt Service Account: (1) the net revenues of the System not otherwise pledged and applied to the payment of other obligations of the City, in an amount, together with other funds which may herein or hereafter from time to time be irrevocably appropriated to the account sufficient to meet the requirements of Minnesota Statutes, Section 475.61 for the payment of the principal and interest of the Bonds; (2) any amount paid for the Bonds in excess of the minimum bid; (3) any collections of all taxes which may hereafter be levied in the event that the net revenues of the System and other funds herein pledged to the payment of the principal and interest on the Bonds are insufficient therefor; (4) all funds remaining in the Construction Account after completion of the Project and payment of the costs thereof; (5) all investment earnings on funds held in the Debt Service Account; and (6) any and all other moneys which are properly available and are appropriated by the governing body of the City to the Debt Service Account. The amount of any surplus remaining in the Debt Service Account when the Bonds and interest thereon are paid shall be used consistent with Minnesota Statutes, Section 475.61, Subdivision 4.

No portion of the proceeds of the Bonds shall be used directly or indirectly to acquire higher yielding investments or to replace funds which were used directly or indirectly to acquire higher yielding investments, except (1) for a reasonable temporary period until such proceeds are needed for the purpose for which the Bonds were issued and (2) in addition to the above in an amount not greater than the lesser of five percent of the proceeds of the Bonds or $100,000. To this effect, any proceeds of the Bonds and any sums from time to time held in the Construction Account or Debt Service Account (or any other City account which will be used to pay principal

or interest to become due on the bonds payable therefrom) in excess of amounts which under then applicable federal arbitrage regulations may be invested without regard to yield shall not be invested at a yield in excess of the applicable yield restrictions imposed by the arbitrage regulations on such investments after taking into account any applicable "temporary periods" or "minor portion" made available under the federal arbitrage regulations. Money in the Fund shall not be invested in obligations or deposits issued by, guaranteed by or insured by the United States or any agency or instrumentality thereof if and to the extent that such investment would cause the Bonds to be "federally guaranteed" within the meaning of Section 149(b) of the Internal Revenue Code of 1986, as amended (the "Code").

16. Coverage Test; Pledge of Net Revenues and Excess Net Revenues. It is hereby found, determined and declared that the net revenues of the System are sufficient in amount to pay when due the principal of and interest on the Bonds and the Outstanding System Bonds and a sum at least five percent in excess thereof. The net revenues of the Sanitary Sewer System are sufficient in amount to pay when due the principal of and interest on the Outstanding Sanitary Sewer Bonds and a sum at least five percent in excess thereof. The net revenues of the System are hereby pledged on a parity with the Outstanding System Bonds and the Outstanding Sanitary Sewer Bonds for the payment of the Bonds and shall be applied for that purpose, but solely to the extent required to meet the principal and interest requirements of the Bonds as the same become due.

Nothing contained herein shall be deemed to preclude the City from making further pledges and appropriations of the net revenues of the System for the payment of other or additional obligations of the City, provided that it has first been determined by the City Council that the estimated net revenues of the System will be sufficient, in addition to all other sources, for the payment of the Bonds and such additional obligations and any such pledge and appropriation of the net revenues of the System may be made superior or subordinate to, or on a parity with the pledge and appropriation herein.

17. Covenant to Maintain Rates and Charges. In accordance with Minnesota Statutes, Section 444.075, the City hereby covenants and agrees with the Holders of the Bonds that it will impose and collect charges for the service, use, availability and connection to the System at the times and in the amounts required to produce net revenues adequate to pay all principal and interest when due on the Bonds. Minnesota Statutes, Section 444.075, Subdivision 2, provides as follows: "Real estate tax revenues should be used only, and then on a temporary basis, to pay general or special obligations when the other revenues are insufficient to meet the obligations".

18. State Credit Enhancement Program. The City hereby ratifies and confirms its covenants in the resolution duly adopted on April 11, 2015, obligating itself to notify the Commissioner of Management and Budget of the State of Minnesota of a potential default in payment of the Bonds and to use the provisions of Minnesota Statutes, Section 446A.086 to guarantee the payment of principal and interest on the Bonds. The Mayor and City Manager are hereby authorized and directed to enter into an agreement with the paying agent for the Bonds or any department of the State of Minnesota required by the provisions of Minnesota Statutes, Section 446A.086.

19. General Obligation Pledge. For the prompt and full payment of the principal and interest on the Bonds, as the same respectively become due, the full faith, credit and taxing powers of the City shall be and are irrevocably pledged. If the net revenues of the System appropriated and pledged to the payment of principal and interest on the Bonds, together with other funds irrevocably appropriated to the Debt Service Account shall at any time be insufficient to pay such principal and interest when due, the City covenants and agrees to levy, without limitation as to rate or amount an ad valorem tax upon all taxable property in the City sufficient to pay such principal and interest as it becomes due. If the balance in the Debt Service Account is ever insufficient to pay all principal and interest then due on the Bonds payable therefrom, the deficiency shall be promptly paid out of any other accounts of the City which are available for such purpose, and such other funds may be reimbursed without interest from the Debt Service Account when a sufficient balance is available therein.

20. Defeasance. When all Bonds have been discharged as provided in this paragraph, all pledges, covenants and other rights granted by this resolution to the registered holders of the Bonds shall, to the extent permitted by law, cease. The City may discharge its obligations with respect to any Bonds which are due on any date by irrevocably depositing with the Bond Registrar on or before that date a sum sufficient for the payment thereof in full; or if any Bond should not be paid when due, it may nevertheless be discharged by depositing with the Bond Registrar a sum sufficient for the payment thereof in full with interest accrued to the date of such deposit. The City may also discharge its obligations with respect to any prepayable Bonds called for redemption on any date when they are prepayable according to their terms, by depositing with the Bond Registrar on or before that date a sum sufficient for the payment thereof in full, provided that notice of redemption thereof has been duly given. The City may also at any time discharge its obligations with respect to any Bonds, subject to the provisions of law now or hereafter authorizing and regulating such action, by depositing irrevocably in escrow, with a suitable banking institution qualified by law as an escrow agent for this purpose, cash or securities described in Minnesota Statutes, Section 475.67, Subdivision 8, bearing interest payable at such times and at such rates and maturing on such dates as shall be required, without regard to sale and/or reinvestment, to pay all amounts to become due thereon to maturity or, if notice of redemption as herein required has been duly provided for, to such earlier redemption date.

21. Compliance With Reimbursement Bond Regulations. The provisions of this paragraph are intended to establish and provide for the City's compliance with United States Treasury Regulations Section 1.150-2 (the "Reimbursement Regulations") applicable to the "reimbursement proceeds" of the Bonds, being those portions thereof which will be used by the City to reimburse itself for any expenditure which the City paid or will have paid prior to the Closing Date (a "Reimbursement Expenditure").

The City hereby certifies and/or covenants as follows:

(a) Not later than sixty days after the date of payment of a Reimbursement Expenditure, the City (or person designated to do so on behalf of the City) has made or will have made a written declaration of the City's official intent (a "Declaration") which effectively (i) states the City's reasonable expectation to reimburse itself for the payment of the Reimbursement Expenditure out of the proceeds of a subsequent borrowing; (ii) gives a general and functional

description of the property, project or program to which the Declaration relates and for which the Reimbursement Expenditure is paid, or identifies a specific fund or account of the City and the general functional purpose thereof from which the Reimbursement Expenditure was to be paid (collectively the "Project"); and (iii) states the maximum principal amount of debt expected to be issued by the City for the purpose of financing the Project; provided, however, that no such Declaration shall necessarily have been made with respect to: (i) "preliminary expenditures" for the Project, defined in the Reimbursement Regulations to include engineering or architectural, surveying and soil testing expenses and similar prefatory costs, which in the aggregate do not exceed 20% of the "issue price" of the Bonds, and (ii) a *de minimis* amount of Reimbursement Expenditures not in excess of the lesser of $100,000 or five percent of the proceeds of the Bonds.

(b) Each Reimbursement Expenditure is a capital expenditure or a cost of issuance of the Bonds or any of the other types of expenditures described in Section 1.150-2(d)(3) of the Reimbursement Regulations.

(c) The "reimbursement allocation" described in the Reimbursement Regulations for each Reimbursement Expenditure shall and will be made forthwith following (but not prior to) the issuance of the Bonds and in all events within the period ending on the date which is the later of three years after payment of the Reimbursement Expenditure or one year after the date on which the Project to which the Reimbursement Expenditure relates is first placed in service.

(d) Each such reimbursement allocation will be made in a writing that evidences the City's use of Bond proceeds to reimburse the Reimbursement Expenditure and, if made within 30 days after the Bonds are issued, shall be treated as made on the day the Bonds are issued.

Provided, however, that the City may take action contrary to any of the foregoing covenants in this paragraph upon receipt of an opinion of its Bond Counsel for the Bonds stating in effect that such action will not impair the tax-exempt status of the Bonds.

22. Continuing Disclosure. The City is the sole obligated person with respect to the Bonds. The City hereby agrees, in accordance with the provisions of Rule 15c2-12 (the "Rule"), promulgated by the Securities and Exchange Commission (the "Commission") pursuant to the Securities Exchange Act of 1934, as amended, and a Continuing Disclosure Undertaking (the "Undertaking") hereinafter described to:

(a) Provide or cause to be provided to the Municipal Securities Rulemaking Board (the "MSRB") by filing at www.emma.msrb.org in accordance with the Rule, certain annual financial information and operating data in accordance with the Undertaking. The City reserves the right to modify from time to time the terms of the Undertaking as provided therein.

(b) Provide or cause to be provided to the MSRB notice of the occurrence of certain events with respect to the Bonds in not more than ten (10) business days after the occurrence of the event, in accordance with the Undertaking.

(c) Provide or cause to be provided to the MSRB notice of a failure by the City to provide the annual financial information with respect to the City described in the Undertaking, in not more than ten (10) business days following such occurrence.

(d) The City agrees that its covenants pursuant to the Rule set forth in this paragraph and in the Undertaking is intended to be for the benefit of the Holders of the Bonds and shall be enforceable on behalf of such Holders; provided that the right to enforce the provisions of these covenants shall be limited to a right to obtain specific enforcement of the City's obligations under the covenants.

The Mayor and City Manager or any other officer of the City authorized to act in their place (the "Officers") are hereby authorized and directed to execute on behalf of the City the Undertaking in substantially the form presented to the City Council subject to such modifications thereof or additions thereto as are (i) consistent with the requirements under the Rule, (ii) required by the Purchaser of the Bonds, and (iii) acceptable to the Officers.

23. Certificate of Registration. The City Manager is hereby directed to file a certified copy of this resolution with the County Auditor of Dakota County, Minnesota, together with such other information as the Auditor shall require, and to obtain the County Auditor's certificate that the Bonds have been entered in the County Auditor's Bond Register.

24. Records and Certificates. The officers of the City are hereby authorized and directed to prepare and furnish to the Purchaser, and to the attorneys approving the legality of the issuance of the Bonds, certified copies of all proceedings and records of the City relating to the Bonds and to the financial condition and affairs of the City, and such other affidavits, certificates and information as are required to show the facts relating to the legality and marketability of the Bonds as the same appear from the books and records under their custody and control or as otherwise known to them, and all such certified copies, certificates and affidavits, including any heretofore furnished, shall be deemed representations of the City as to the facts recited therein.

25. Negative Covenant as to Use of Bond Proceeds and Project. The City hereby covenants not to use the proceeds of the Bonds or to use the Project, or to cause or permit them to be used, or to enter into any deferred payment arrangements for the cost of the Project, in such a manner as to cause the Bonds to be "private activity bonds" within the meaning of Sections 103 and 141 through 150 of the Code.

26. Tax-Exempt Status of the Bonds; Rebate. The City shall comply with requirements necessary under the Code to establish and maintain the exclusion from gross income under Section 103 of the Code of the interest on the Bonds, including without limitation (1) requirements relating to temporary periods for investments, (2) limitations on amounts invested at a yield greater than the yield on the Bonds, and (3) the rebate of excess investment earnings to the United States. The City expects to satisfy the 24-month expenditure exemption for gross proceeds of the Bonds as provided in Section 1.148-7(d)(1) of the Regulations. The Mayor and/or City Manager are hereby authorized and directed to make such elections as to arbitrage and rebate matters relating to the Bonds as they deem necessary, appropriate or desirable in connection with the Bonds, and all such elections shall be, and shall be deemed and treated as, elections of the City.

27. Designation of Qualified Tax-Exempt Obligations. In order to qualify the Bonds as "qualified tax exempt obligations" within the meaning of Section 265(b)(3) of the Code, the City hereby makes the following factual statements and representations:

(a) the Bonds are issued after August 7, 1986;

(b) the Bonds are not "private activity bonds" as defined in Section 141 of the Code;

(c) the City hereby designates the Bonds as "qualified tax exempt obligations" for purposes of Section 265(b)(3) of the Code;

(d) the reasonably anticipated amount of tax exempt obligations (other than private activity bonds, treating qualified 501(c)(3) bonds as not being private activity bonds) which will be issued by the City (and all entities treated as one issuer with the City, and all subordinate entities whose obligations are treated as issued by the City) during this calendar year 2016 will not exceed $10,000,000;

(e) not more than $10,000,000 of obligations issued by the City during this calendar year 2016 have been designated for purposes of Section 265(b)(3) of the Code; and

(f) the aggregate face amount of the Bonds does not exceed $10,000,000.

The City shall use its best efforts to comply with any federal procedural requirements which may apply in order to effectuate the designation made by this paragraph.

28. Payment of Issuance Expenses. The City authorizes the Purchaser to forward the amount of Bond proceeds allocable to the payment of issuance expenses to the Bond Registrar on the closing date for further distribution as directed by Ehlers.

29. Official Statement. The Official Statement relating to the Bonds prepared and distributed by Ehlers is hereby approved and the officers of the City are authorized in connection with the delivery of the Bonds to sign such certificates as may be necessary with respect to the completeness and accuracy of the Official Statement.

30. Severability. If any section, paragraph or provision of this resolution shall be held to be invalid or unenforceable for any reason, the invalidity or unenforceability of such section, paragraph or provision shall not affect any of the remaining provisions of this resolution.

31. Headings. Headings in this resolution are included for convenience of reference only and are not a part hereof, and shall not limit or define the meaning of any provision hereof.

The motion for the adoption of the foregoing resolution was duly seconded by member _____ and, after a full discussion thereof and upon a vote being taken thereon, the following voted in favor thereof:

and the following voted against the same:

Whereupon the resolution was declared duly passed and adopted.

STATE OF MINNESOTA
COUNTY OF DAKOTA
CITY OF WEST ST. PAUL

I, the undersigned, being the duly qualified and acting City Manager of the City of West St. Paul, Minnesota, DO HEREBY CERTIFY that I have compared the attached and foregoing extract of minutes with the original thereof on file in my office, and that the same is a full, true and complete transcript of the minutes of a meeting of the City Council duly called and held on the date therein indicated, insofar as such minutes relate to considering proposals and awarding the sale of $5,110,000 General Obligation Utility Revenue Bonds, Series 2016A.

WITNESS my hand on May __, 2016.

_____
City Manager

EXHIBIT A

PROPOSALS

[To be supplied by Ehlers & Associates, Inc.]

City of West St. Paul

TO: Mayor and City Council

THROUGH: City Manager

FROM: Public Works & Parks Dir./City Engineer

DATE: May 23, 2016

SUBJECT: Approve JPA with Dakota County for Safe Routes to School Project on Wentworth/Bellows – Project #14-6

BACKGROUND INFORMATION:
In early 2014 the City submitted a Safe Routes To School (SRTS) federal grant application for the installation of a trail along the north side of Wentworth Ave., from Charlton Street to Bellows Street, and a sidewalk along the west side of Bellows Street from Wentworth Avenue to Thompson Avenue. The City was notified in summer 2014 that we were successful in obtaining a SRTS grant of $125,000 toward the project. Since the trail is along Wentworth Avenue, a Dakota County roadway, the County is also a partner on the project.

At the February 8, 2016 City Council meeting, increased construction and right-of-way costs totaling $145,000 were presented. This put the overall estimated project cost at $435,000 and additional city expense at $45,140. Council direction was to continue to move forward with this project. Staff then met with MnDOT to discuss the increase in construction costs (as right-of-way expenses are not covered) and was successful in obtaining an additional $41,700 of potential federal participation. The additional federal funds are only available for construction and construction administration costs and will follow the 80/20 cost split (80% federal/20% local). Therefore, depending on actual costs of construction and construction administration, all of the additional federal money may not be used.

FISCAL IMPACT:
In order to formalize the process with Dakota County, a Joint Powers Agreement (JPA) must be entered into between the City and the County. The JPA mirrors the current Dakota County Transportation policy which requires cities with a population of over 5,000 to contribute 45% of the funding on a County project, which applies to all non-federally funded costs on Wentworth Avenue. The City will fund all costs along Bellows Street minus federal participation. The City Attorney has reviewed the JPA.

STAFF RECOMMENDATION:
Staff recommends that the City Council approve the Joint Powers Agreement with Dakota County for the Wentworth/Bellows Safe Routes to School Project #14-6.

TO: Mayor and City Council

THROUGH: Matt Fulton, City Manager

Jim Hartshorn, Comm. Dev. Dir.

FROM: Ben Boike, Assistant Comm. Dev. Dir.

DATE: May 23, 2016

SUBJECT: First Reading: IUP Amendment

City of West St. Paul

BACKGROUND:

In 2011, the City Council approved language requiring an Interim Use Permit for temporary outdoor zoning uses in commercial districts, including sale of plants, food stands, sale of fireworks, display of general merchandise, etc. The current language requires all applicants to apply for an annual permit should they decide to continue the operation in consecutive years. The permit currently requires Planning Commission and Council approval each year.

In attempt to streamline the process for returning applicants, Staff is recommending amending the zoning ordinance to allow for an administrative review process should the request be similar to a previously approved request by Council. Staff is recommending the following requirements to bypass the formal approval process:

(1) The application is a renewal of an Interim Use Permit which was previously approved by the City Council pursuant to 153.029 (C);
(2) There have been no issues or violations with the existing Interim Use Permit;
(3) There are no substantial changes to the Interim Use Permit as determined by the Zoning Administrator;
(4) The Community Development Department has conducted an administrative review; and
(5) The property owner on which the Interim Use Permit is located is current on all City fees.

PLANNING COMMISSION:

The Planning Commission met in regular session on May 17, 2016 and voted 7-0 to recommend approval of the proposed amendment as written. No one from the public wished to speak on the item.

FISCAL IMPACT

N/A

		Amount
Fund:		
Department:		
Account:		

STAFF RECOMMENDATION:

Staff recommends Council approve the first reading as written.

ATTACHMENT:

Ordinance amending Section 153.029

TIMELINE:

May 17, 2016 – Planning Commission (public hearing)
May 23, 2016 – Council first reading
June 13, 2016 – Council final reading (public hearing)

Ord. No. 16-

CITY OF WEST ST. PAUL
DAKOTA COUNTY, MINNESOTA

AN ORDINANCE AMENDING
WEST ST. PAUL ZONING ORDINANCE SECTION 153.029
REGARDING INTERIM USE PERMITS

The City Council of West St. Paul does ordain:

SECTION 1. AMENDMENT. West St. Paul Zoning Ordinance Section 153.029 is hereby amended by adding the following:

(G) *Exceptions.* Notwithstanding the provision of division 153.029 (C) above, an interim use shall not require a hearing before the Planning Commission or City Council and may be approved administratively, provided that:

(1) The application is a renewal of an Interim Use Permit which was previously approved by the City Council pursuant to 153.029 (C);
(2) There have been no issues or violations with the existing Interim Use Permit;
(3) There are no substantial changes to the Interim Use Permit as determined by the Zoning Administrator;
(4) The Community Development Department has conducted an administrative review; and
(5) The property owner on which the Interim Use Permit is located is current on all City fees.

SECTION 2. EFFECTIVE DATE. This ordinance shall be in full force and effect from and after its passage and publication according to law.

Passed this _____ day of _____, 2016.

Ayes: Nays:

Attest:

_____ _____

David Meisinger, Mayor Chantal Doriott, City Clerk

TO: Mayor and City Council

THROUGH: Matt Fulton, City Manager

FROM: Korine Land, City Attorney

DATE: May 23, 2016

SUBJECT: Permit Parking Zone Ordinance, First Reading

City of West St. Paul

BACKGROUND INFORMATION:
There are certain areas in the city where the residents of a neighborhood may benefit from a permit parking zone, due to the limited availability of parking on residential streets. To that end, Staff has prepared an ordinance that allows the Council to establish a permit parking zone. Elements of the ordinance include:

- A petition must be filed with the city clerk
- The petition must:
  - Identify the proposed permit parking zone
  - Articulate the necessity for the zone
  - Provide the names, addresses and signatures of 70% of the property owners or occupants of properties within the proposed parking zone. (the signors address must list to a property included the permit parking zone; only one signor/household)
- The City will send notice to property owners within 350 feet of the proposed permit parking zone informing them of the Council hearing to consider the zone
- The Council will consider the application at a hearing and may approve, deny or modify the permit parking zone
- Permanent parking permits will be issued to owners/occupants who reside at properties within the zone. They must identify the vehicles to which the permits will be affixed and those identified vehicles must register to the same address within the zone. (with the except of work vehicles, which will be allowed with proof of residency and proof of employment) Permits will be valid for as long as the person resides at the property.
- Temporary parking permits will be issued to owners/occupants who reside at properties within the zone for use by their guests. They must identify the vehicles to which the permits will be affixed and the dates for which they will be needed. The dates will be listed on the permit.
- Fees for permanent and temporary permits may be established in the fee schedule

This is a first reading. If approved, it will be published for a public hearing and final reading. If adopted, Council will need to discuss the appropriate permit fees.

FISCAL IMPACT:
Signs will cost about $200/sign
Approximately 4 signs are required/block
Administrative costs for notice and permit verification and processing is estimated to be $200/permit parking zone

STAFF RECOMMENDATION:
Discuss ordinance and approve first reading

ATTACHMENTS:
An Ordinance Amending Section 72.05 of the West St. Paul City Code Regarding General Parking Restrictions

ORDINANCE NO._____
CITY OF WEST ST. PAUL
DAKOTA COUNTY, MINNESOTA

AN ORDINANCE AMENDING SECTION 72.05
OF THE WEST ST. PAUL CITY CODE REGARDING
GENERAL PARKING RESTRICTIONS

The City Council of West St. Paul does ordain:

SECTION 1. AMENDMENT. West St. Paul City Code Section 72.05 is hereby amended as follows:

72.05 GENERAL PARKING RESTRICTIONS.

(A) *No parking, stopping, standing, bus stop zones.*

(1) The City Council may, by resolution, designate certain streets or portions of streets as "no parking", "no stopping," "no standing" or "bus stop" zones and may limit the hours in which the restrictions apply.

(2) Except when necessary to avoid conflict with other traffic or in compliance with the directions of a police officer or a traffic control device, no person may stop or park a vehicle in an established no stopping, standing or bus stop zone.

(3) No vehicle may be parked in a no-parking zone during hours when parking is prohibited. No vehicle, except a bus, may be parked or standing in a bus stop zone.

(B) *Time limit parking zones.* The Council may, by resolution, designate certain areas where the right to park is limited during specified hours. No person may park a vehicle in any limited parking zone for a longer period than so specified on a posted sign.

(C) *Permit parking zones*. No person may park a vehicle in a permit parking zone without first obtaining and displaying the proper permit.

(1) Petition. In order to establish a permit parking zone, 70 percent of the residents and/or businesses who have an address within the proposed permit parking zone must sign and file a written petition with the city clerk with the following:

a. Identify the specific streets, blocks or area that should be included in the permit parking zone, with a map depicting the proposed permit parking zone;

b. Articulate the necessity for the permit parking zone.

c. Printed names, addresses and signatures of 70% of the property owners or adult occupants of properties within the proposed permit parking zone. For purposes of

calculating 70%, only one signature shall be counted per property or per legal address.

(2) Council consideration. Upon receipt of a valid petition, the city shall notify all property owners and occupants, if known within the proposed permit parking zone, as well as those property owners within 350 feet of the proposed permit parking zone of the date and time that the petition will be considered by the council. After a hearing, the council may approve, modify or deny the permit parking zone in order to protect the health, safety and welfare of the citizens of the city. If approved, a permit parking zone establishing the boundaries of the zone will be adopted by city council resolution.

(3) Permanent Parking Permits. Upon application to the Police Department, owners and occupants who reside at a property address that is within an approved permit parking zone may be issued a parking permit. The applicant must identify the vehicles to which the parking permit will be permanently affixed by make, model and license plate number, and pay the appropriate fee. The vehicles must register to the same property address for which the parking permit is being requested. Employees who park work vehicles at their residence may provide proof of residency at that address and proof of employment as sufficient documentation for a permanent parking permit. The parking permits shall be valid as long as the owner or occupant resides at the property that is within the permit parking zone.

(4) Temporary Parking Permits. Owners and occupants who reside at a property address that is in the permit parking zone may apply for a temporary parking permit on behalf of their guests. The applicant must identify the vehicles to which the temporary parking permit will be affixed by make, model and license plate number and the dates for which the temporary parking permit is requested, and pay the appropriate fee. The dates shall be listed on the temporary parking permit, which must be prominently displayed in the vehicle.

(5) The Council may establish permit parking fees by city council resolution to recover the cost of signage and permit issuance.

~~(C)~~(D) *Prima facie violation.* The presence of any motor vehicle on any street when standing or parked in violation of this section is prima facie evidence that the registered owner of the vehicle committed or authorized the commission of the violation.

SECTION 2. SUMMARY PUBLICATION. Pursuant to Minnesota Statutes Section 412.191, in the case of a lengthy ordinance, a summary may be published. While a copy of the entire ordinance is available without cost at the office of the City Clerk, the following summary is approved by the City Council and shall be published in lieu of publishing the entire ordinance:

The ordinance amendment accomplishes the following: a) It adds a permit parking zone; b) it articulates the process to establish a permit parking zone; and c) it allows for fees to be established to recover the cost of this specialized signage and permit system.

SECTION 3. EFFECTIVE DATE. This Ordinance shall be in full force and effect from and after its passage and publication according to law.

Passed this _____ day of _____, 2016.

Ayes: Nays:

Attest:

_____ _____

David Meisinger, Mayor Chantal Doriott, City Clerk